VAC-11 / VAC-21 / VAC-31

CABINET EXPLODED DIAGRAM

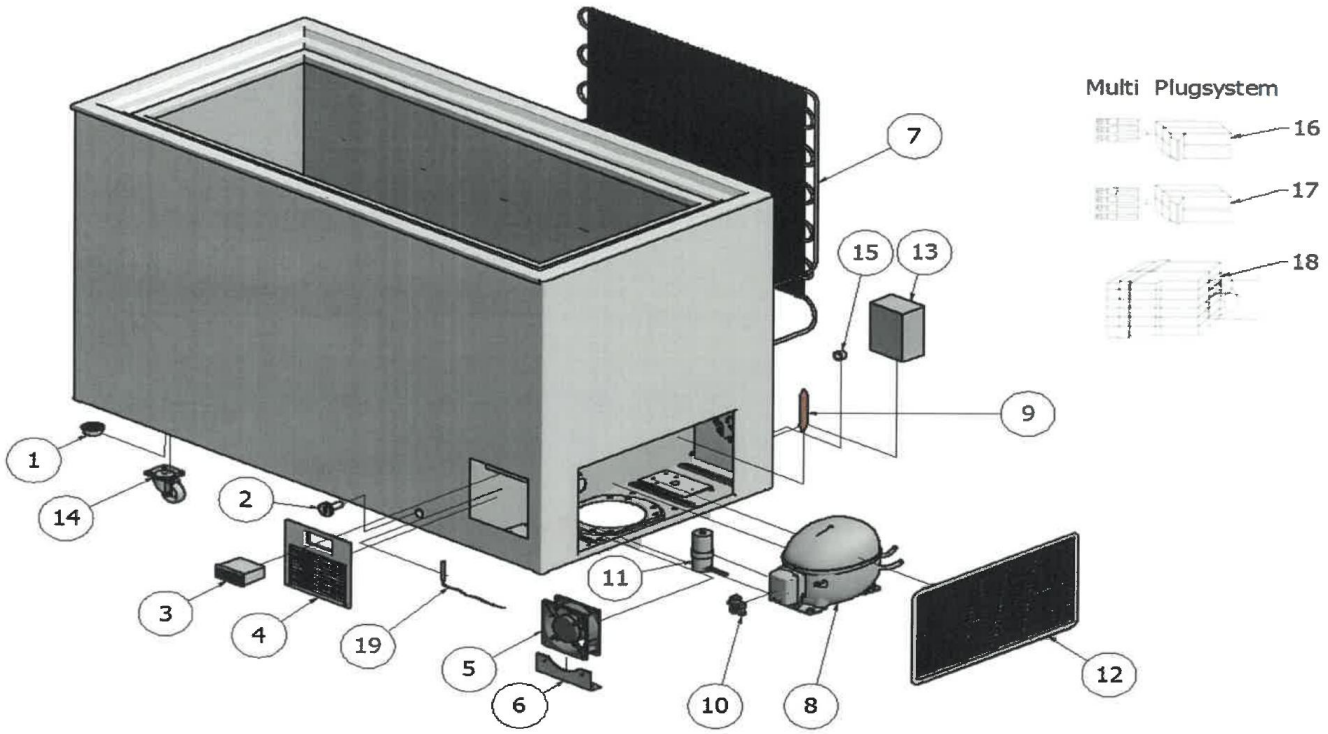

1950 Joe McIntosh Rd
Plant City, FL 33565
800.441.4014 | 813.870.0340
www.excellenceindustries.com

©October 2026 Excellence Industries

VAC-11 / VAC-21 / VAC-31

PARTS INDEX - 220-230V

Item	Parts name in EN	VAC-11 code	VAC-21 code	VAC-31 code	Qty
1	Plastic foot	SP1412 SP1413	SP1412 SP1413	SP1412 SP1413	4
2	Stopper for drain	E1HU	E1HU	E1HU	1
3	Electronic thermostat 220V excl. sensor	DIXELL30CH2	DIXELL30CH2	DIXELL30CH2	1
4	Front ventilation grill	PLASTMFP13	PLASTMFP13	PLASTMFP13	1
5	Fan 220V	BLÆS230HBT	BLÆS230HBT	BLÆS230HBT	1
6	Bracket for fan	Beslag BL	Beslag BL	Beslag BL	1
7	Back precondensor	Kondryg1	Kondryg3	Kondryg3	1
8	Compressor 230V 50/60Hz R290	NEU2140U	NEU2140U	NEU2155U	1
9	Filter Dryer	Filter6.1xh9	Filter6.1xh9	Filter6.1xh9	1
10	Starting Relay	NEU2140URE	NEU2140URE	NEU2155URE	1
11	Starting Capacitor	NEU2140USK	NEU2140USK	NEU2155USK	1
12	Cover for motor room	SP1417	SP1417	SP1417	1
13	Alarm box incl. Cables	8100.0500	8100.0500	8100.0500	1
14	Wheel set w/brake	8100.0201	8100.0201	8100.0201	4
15	Cable retainer	E59AFLAST1	E59AFLAST1	E59AFLAST1	1
16	Power cable	82NETLED.8	82NETLED.8	82NETLED.8	1
17	Cable from dixell to Multi plug	TSL0201	TSL0201	TSL0201	1
18	Multi plug with cable	TSK0106	TSK0106	TSK0106	1
19	PT1000sensor	PT1000sensor	PT1000sensor	PT1000sensor	1

220-230V supplier list. The 115V / 60 Hz parts supplement is on page 4.

1950 Joe McIntosh Rd
Plant City, FL 33565
800.441.4014 | 813.870.0340
www.excellenceindustries.com

©October 2026 Excellence Industries

VAC-11 / VAC-21 / VAC-31

LID EXPLODED DIAGRAM AND PARTS INDEX

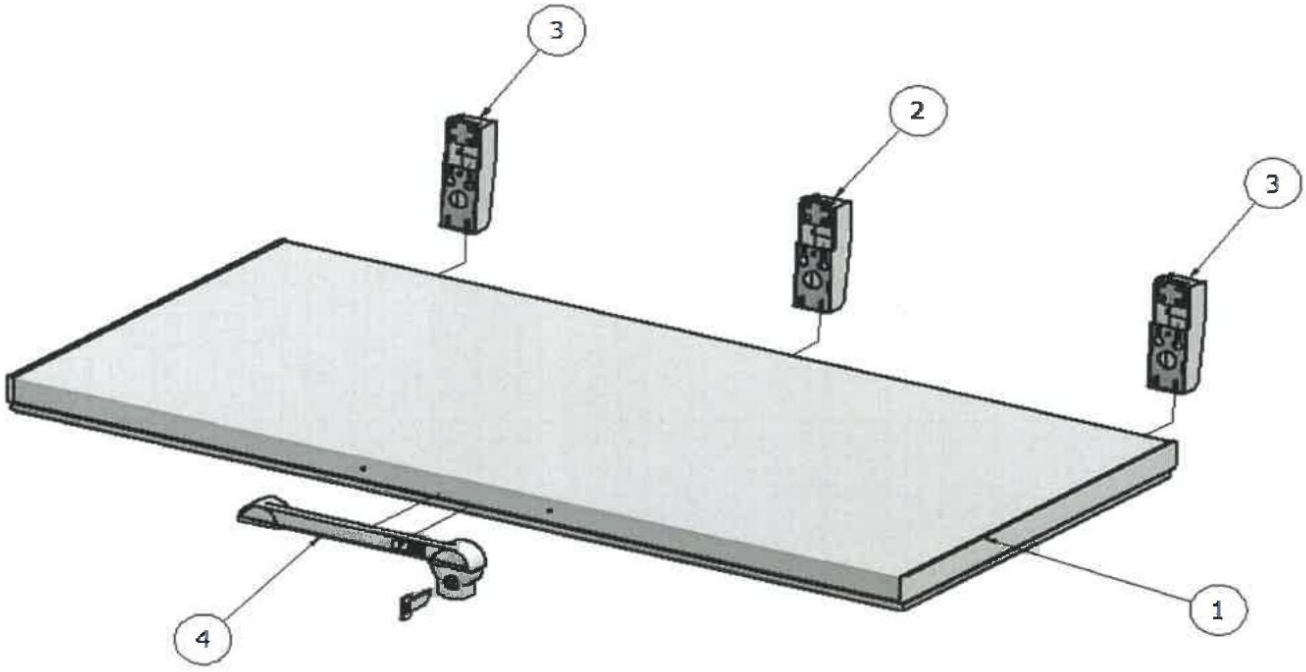

Item	Parts name in EN	VAC-11 code	VAC-21 code	VAC-31 code	Qty
1	Lid without hinges	8010.0100	8010.0200	8010.0302	1
2	Hinge without spring	-	-	Haeng 00	1
3	Hinges with spring	Haeng42 Haeng 42	Haeng 46 Haeng 46	Haeng 46 Haeng 46	1
4	Plastic grip with lock	EPCH	EPCH	EPCH	1

1950 Joe McIntosh Rd
Plant City, FL 33565
800.441.4014 | 813.870.0340
www.excellenceindustries.com

©October 2026 Excellence Industries

VAC-11 / VAC-21 / VAC-31

115V / 60 HZ - UL PARTS SUPPLEMENT

Item	Parts name in EN	VAC-11 code	VAC-21 code	VAC-31 code	Qty
3	Electronic thermostat 115V incl. sensor	DIXELL30CH1	DIXELL30CH1	DIXELL30CH1	1
5	Fan 115V	BLAES115HBT	BLAES115HBT	BLAES115HBT	1
8	Compressor 120V 60Hz	NEU2155U1	NEU2155U1	NEU2155U1	1
19	Multiplug with cable	TSKU0101	TSKU0101	TSKU0101	1
12	Starting relay	NEU2155U1RE	NEU2155U1RE	NEU2155U1RE	1
13	Starting capacitor	NEU2155U1SK	NEU2155U1SK	NEU2155U1SK	1
	Motor protector / KLIXON	NEU2155U1KL	NEU2155U1KL	NEU2155U1KL	1

The supplier supplement uses different item numbers from the main drawing. Match parts by description and code. The motor protector has no item number in the source.

1950 Joe McIntosh Rd
Plant City, FL 33565
800.441.4014 | 813.870.0340
www.excellenceindustries.com

©October 2026 Excellence Industries