# MCT SERIES

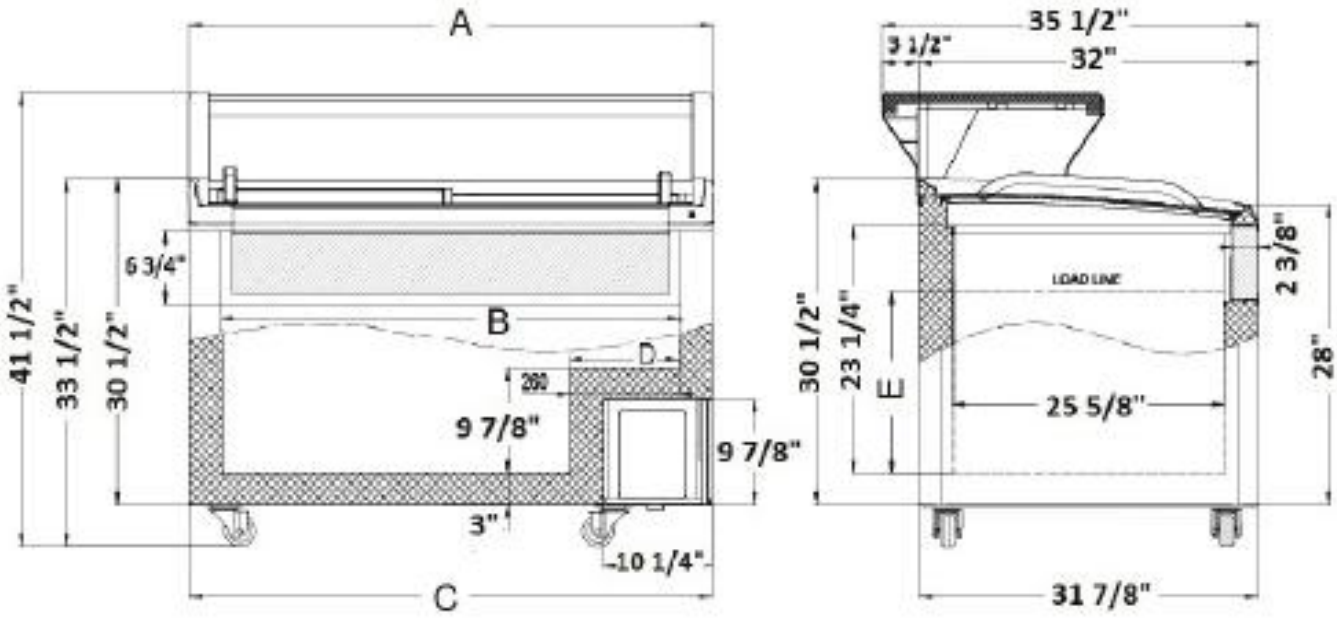


| Model | A | B | C | D | E |
|---|---|---|---|---|---|
| MCT-2 | 25” | 18 1/2” | 24 3/4” | 18 1/2” | 19 3/8” |
| MCT-4 | 49 3/8” | 42 7/8” | 49 1/4” | 10 1/4” | 17” |
| MCT-6 | 73 3/8” | 67” | 73 1/4” | 10 1/4” | 17” |

1950 Joe McIntosh Rd
Plant City, FL 33565
800.441.4014 | 813.870.0340
www.excellenceindustries.com

©October 2026 Excellence Industries