MCT-2HC

EXPLODED VIEW

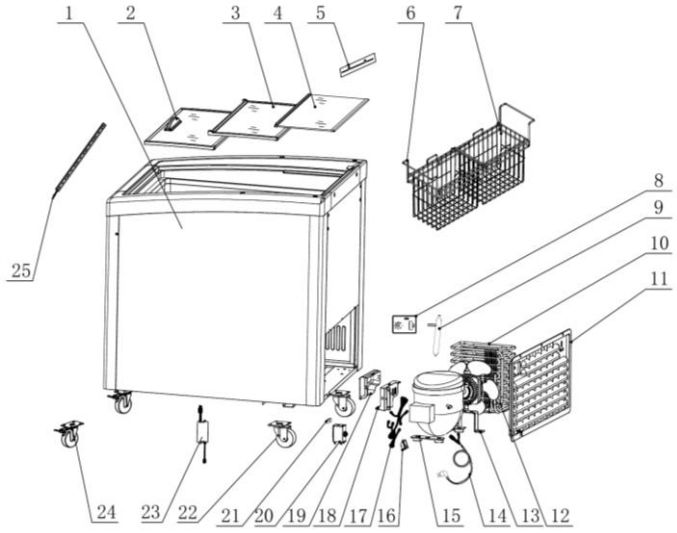

Item	Parts name in EN	Code	Qty
2	FRONT LID	166-31-0000	
3	MIDDLE LID	166-32-0000	
4	BACK LID	166-33-0000	
6	BASKET BRACKET (2)	166-20-0300	
7	BASKET (4)	166-20-0200	
9	FILTER DRYER	101-20-0502	
10	EXTERNAL CONDENSER	106-20-1603	
11	COVER	123-20-0400	
12	FAN	105-60-0101	
13	FAN BRACKET	101-70-0201	
14	POWER CABLE	107-61-0319	
15	COMPRESSOR	HYE81MSU42	
16	LED SWITCH	102-60-0400	
18	CONTROL KBT	168-60-0100	
19	CONTROL KBT COVER	168-60-0200	
20	THERMOSTAT	108-70-0100	
22	NON-LOCKING CASTER	101-20-1100	
23	TRANSFORMER	119-60-0610	
24	LOCKING CASTER	101-20-1101	
25	LED LIGHT	123-52-0603	

Only source-listed parts are included. Blank fields were not provided.

1950 Joe McIntosh Rd
Plant City, FL 33565
800.441.4014 | 813.870.0340
www.excellenceindustries.com

©October 2026 Excellence Industries

MCT-4HC

EXPLODED VIEW

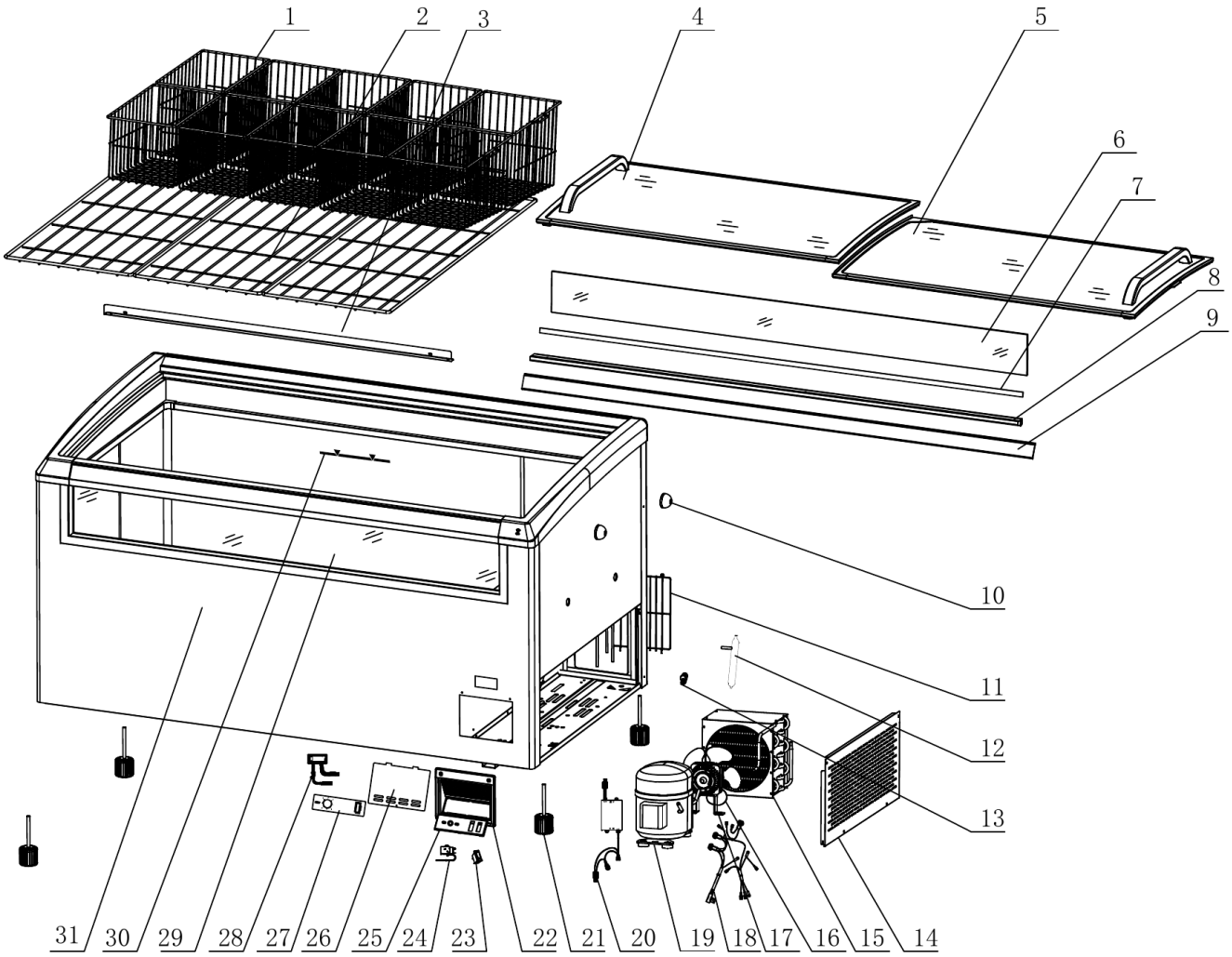

1950 Joe McIntosh Rd
Plant City, FL 33565
800.441.4014 | 813.870.0340
www.excellenceindustries.com

©October 2026 Excellence Industries

MCT-4HC

PARTS INDEX

Item	Parts name in EN	Code	Qty
1	BASKET (10)	197-20-1404	
2	BASKET SHELF (3)	192-21-0300	
3	BASKET BRACKET (2)	197-20-1100	
4	TOP LID	182-31-0000	
5	BOTTOM LID	182-41-0000	
6	WINDSHIELD	197-20-0600	
7	LED LIGHT	197-20-1001	
8	LED BRACKET	197-20-0801	
9	FRONT PRICE TAG	197-20-0300	
10	BUMPER	101-20-1700	
11	REAR COVER	102-20-0704	
12	FILTER DRYER	101-20-0502	
14	COVER	149-20-0301	
15	EXTERNAL CONDENSER	401-60-0209	
16	FAN	105-60-0106	
17	FAN BRACKET	101-70-0201	
18	POWER CABLE	118-60-0256	
19	COMPRESSOR	EM2X3125U	
20	TRANSFORMER	119-60-0622	
21	FOUNDATION BOLT	149-51-1600	
22	CONTROL BOX	125-60-0100	
23	LED SWITCH	102-60-0400	
24	THERMOSTAT	108-70-0100	
25	CONTROL SUPPORT BRACKET	125-60-0200	
26	CONTROL BOX COVER	125-60-0300	
27	CONTROL PANEL	125-60-0407	
28	THERMOMETER	105-20-2010	

Only source-listed parts are included. Blank fields were not provided.

1950 Joe McIntosh Rd
Plant City, FL 33565
800.441.4014 | 813.870.0340
www.excellenceindustries.com

©October 2026 Excellence Industries

MCT-5HC / MCT-6HC

EXPLODED VIEW

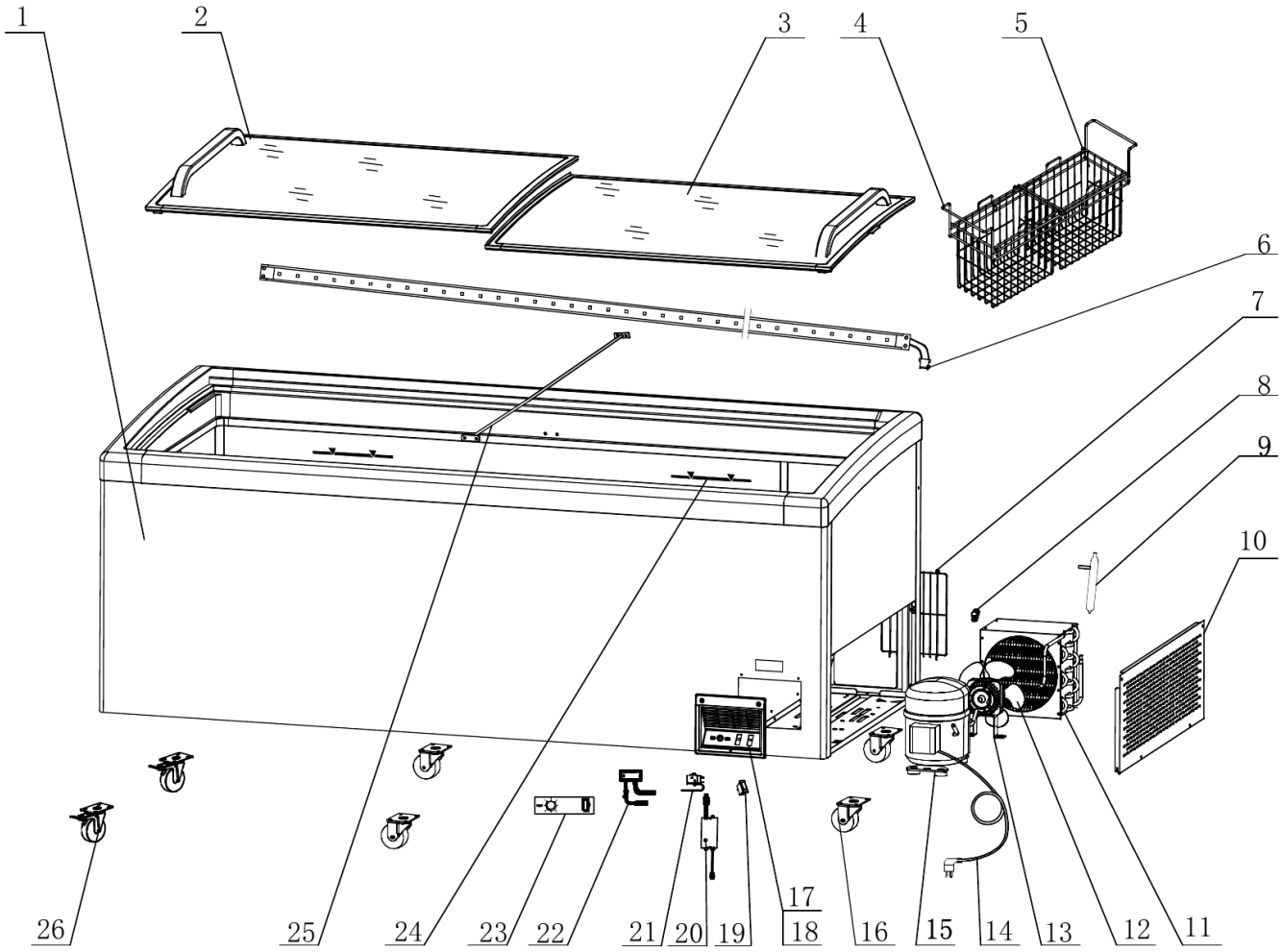

1950 Joe McIntosh Rd
Plant City, FL 33565
800.441.4014 | 813.870.0340
www.excellenceindustries.com

©October 2026 Excellence Industries

MCT-5HC

PARTS INDEX

Item	Parts name in EN	Code	Qty
2	TOP LID	164-30-0000	
3	BOTTOM LID	164-40-0000	
4	BASKET BRACKET (6)	164-20-0201	
5	BASKET (12)	164-20-0303	
6	LED LIGHT	104-54-0303	
7	REAR COVER	102-20-0704	
9	FILTER DRYER	101-20-0502	
10	COVER	149-20-0301	
11	EXTERNAL CONDENSER	401-60-0209	
12	FAN	105-60-0104	
13	FAN BRACKET	101-70-0201	
14	POWER CABLE	118-60-0248	
15	COMPRESSOR	VESA7U	
16	NON-LOCKING CASTER	101-20-1100	
17	CONTROL BOX	125-60-0100	
18	CONTROL SUPPORT BRACKET	125-60-0200	
19	LED SWITCH	102-60-0400	
20	TRANSFORMER	119-60-0610	
21	THERMOSTAT	108-70-0100	
22	THERMOMETER	105-20-2010	
25	BODY ROD	149-55-0600	
26	LOCKING CASTER	101-20-1101	

Only source-listed parts are included. Blank fields were not provided.

1950 Joe McIntosh Rd
Plant City, FL 33565
800.441.4014 | 813.870.0340
www.excellenceindustries.com

©October 2026 Excellence Industries

MCT-6HC

PARTS INDEX

Item	Parts name in EN	Code	Qty
2	TOP LID	149-30-0000	
3	BOTTOM LID	149-40-0001	
4	BASKET BRACKET (8)	164-20-0201	
5	BASKET (16)	164-20-0303	
6	LED LIGHT	115-60-0302	
7	REAR COVER	102-20-0704	
9	FILTER DRYER	101-20-0502	
10	COVER	149-20-0301	
11	EXTERNAL CONDENSER	401-60-0209	
12	FAN	105-60-0104	
13	FAN BRACKET	101-70-0201	
14	POWER CABLE	118-60-0248	
15	COMPRESSOR	VESA7U	
16	NON-LOCKING CASTER	101-20-1100	
17	CONTROL BOX	125-60-0100	
18	CONTROL SUPPORT BRACKET	125-60-0200	
19	LED SWITCH	102-60-0400	
20	TRANSFORMER	119-60-0610	
21	THERMOSTAT	108-70-0100	
22	THERMOMETER	105-20-2010	
25	BODY ROD	149-55-0600	
26	LOCKING CASTER	101-20-1101	

Only source-listed parts are included. Blank fields were not provided.

1950 Joe McIntosh Rd
Plant City, FL 33565
800.441.4014 | 813.870.0340
www.excellenceindustries.com

©October 2026 Excellence Industries