MB-2HCD

EXPLODED VIEW

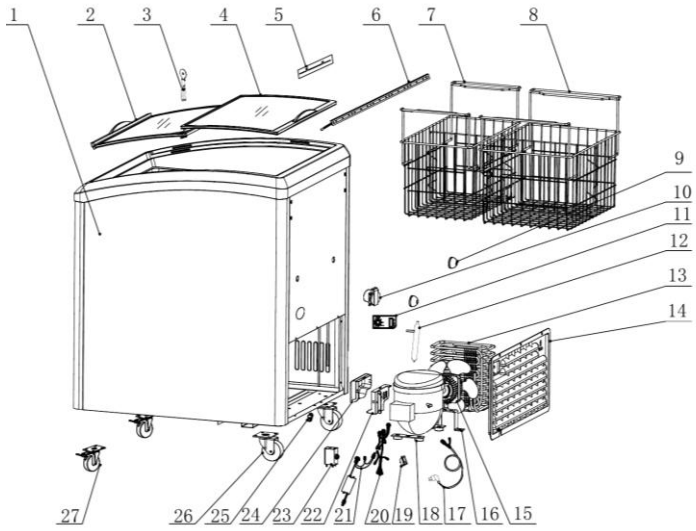

Item	Parts name in EN	Code	Qty
2	BOTTOM LID	129-40-0000	
3	LOCK	122-20-1000	
4	TOP LID	129-30-0000	
6	LED LIGHT	123-52-0603	
10	SOCKET	106-70-1402	
12	FILTER DRYER	101-20-0502	
13	EXTERNAL CONDENSER	106-20-1603	
14	COVER	123-20-0400	
15	FAN	105-60-0101	
16	FAN MOTOR BRACKET	101-70-0201	
17	POWER CABLE	107-61-0319	
18	COMPRESSOR	HYE81MSU42	
19	LED SWITCH	102-60-0400	
21	TRANSFORMER	119-60-0613	
22	CONTROL KBT (BRACKET)	168-60-0100	
23	THERMOSTAT	115-60-0100	
24	CONTROL KBT COVER	168-60-0200	
26	NON-LOCKING CASTER	101-20-1100	
27	LOCKING CASTER	101-20-1101	
7 & 8	BASKET SET	129-20-0213 / 129-20-0315	

Only source-listed parts are included. Blank fields were not provided.

1950 Joe McIntosh Rd
Plant City, FL 33565
800.441.4014 | 813.870.0340
www.excellenceindustries.com

©October 2026 Excellence Industries