Excellence Industries

Profit from the Power of Partnership.



KOF

REFRIGERATED PROMOTION COUNTER

KEY FEATURES

- Horizontal open display case
- Ventilated refrigeration
- Interior temperature display
- LED lighting
- Night curtain
- 3.5-foot cord
- Environmentally friendly R-290 refrigerant
- Temperature range of +30°F to +44°F

ADVANTAGES

- Open merchandiser design keeps product easy to shop
- Four model widths support flexible placements
- Stainless steel interior with pre-coated exterior
- Automatic drain water heater



KOF-2

DOE LISTED

Complies with 2017 DOE standards for self-contained commercial refrigerators and commercial freezers without doors

1950 Joe McIntosh Rd
Plant City, FL 33565
800.441.4014 | 813.870.0340
www.excellenceindustries.com



KOF

REFRIGERATED PROMOTION COUNTER

SPECIFICATIONS

Model	KOF-2	KOF-3	KOF-4	KOF-5
Cubic Feet	6.8	9.5	12.5	15.5
Width	28”	39”	51”	63”
Approx. Weight (Net)	331 lb (150 kg)	390 lb (177 kg)	448 lb (203 kg)	551 lb (250 kg)
Approx. Weight (Shipping)	375 lb (170 kg)	434 lb (197kg)	514 lb (233 kg)	595 lb (270 kg)
Running Amps	6	8	8	10.4
Compressor HP	1/2	3/4	3/4	1/2 x 2
Container Quantity	78	52	42	28

NEMA 5-15P



115 / 60 / 1

AVAILABLE OPTIONS

- N/A

PRODUCT INFORMATION

Click or scan QR to access spec sheets and technical information

KOF SERIES

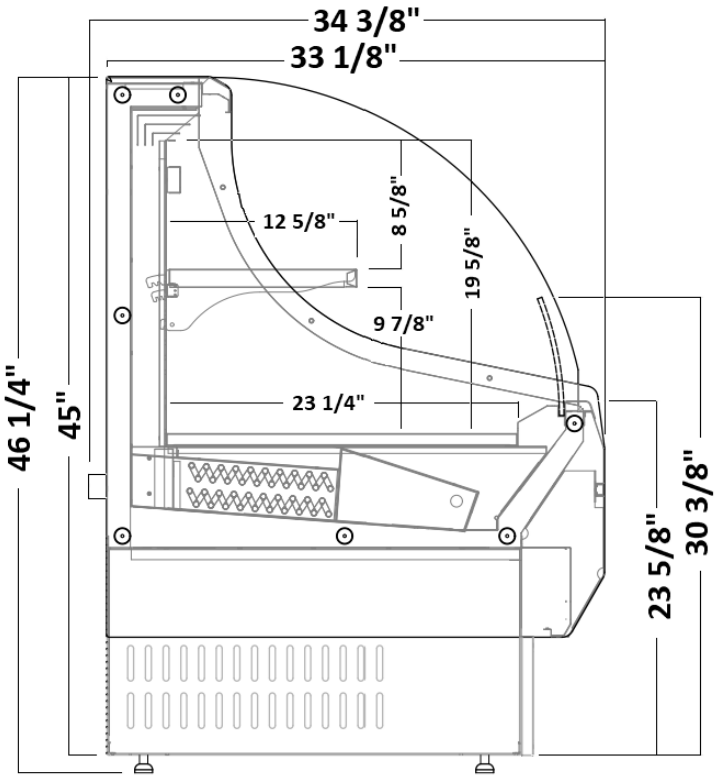

NOTE: Dimensions are in inches.
NOTE: Dimensions are all nominal lengths, use final spec sheet for exact data and model availability.
NOTE: Shipping weight does not include weight of pallets when needed.
NOTE: These merchandisers are designed for use in stores where temperature and humidity do not exceed listed operating conditions.
NOTE: We reserve the right to change specifications and product design without notice

©November 18, 2026 Excellence Industries

Excellence Industries