HBG SERIES

EXPLODED VIEW

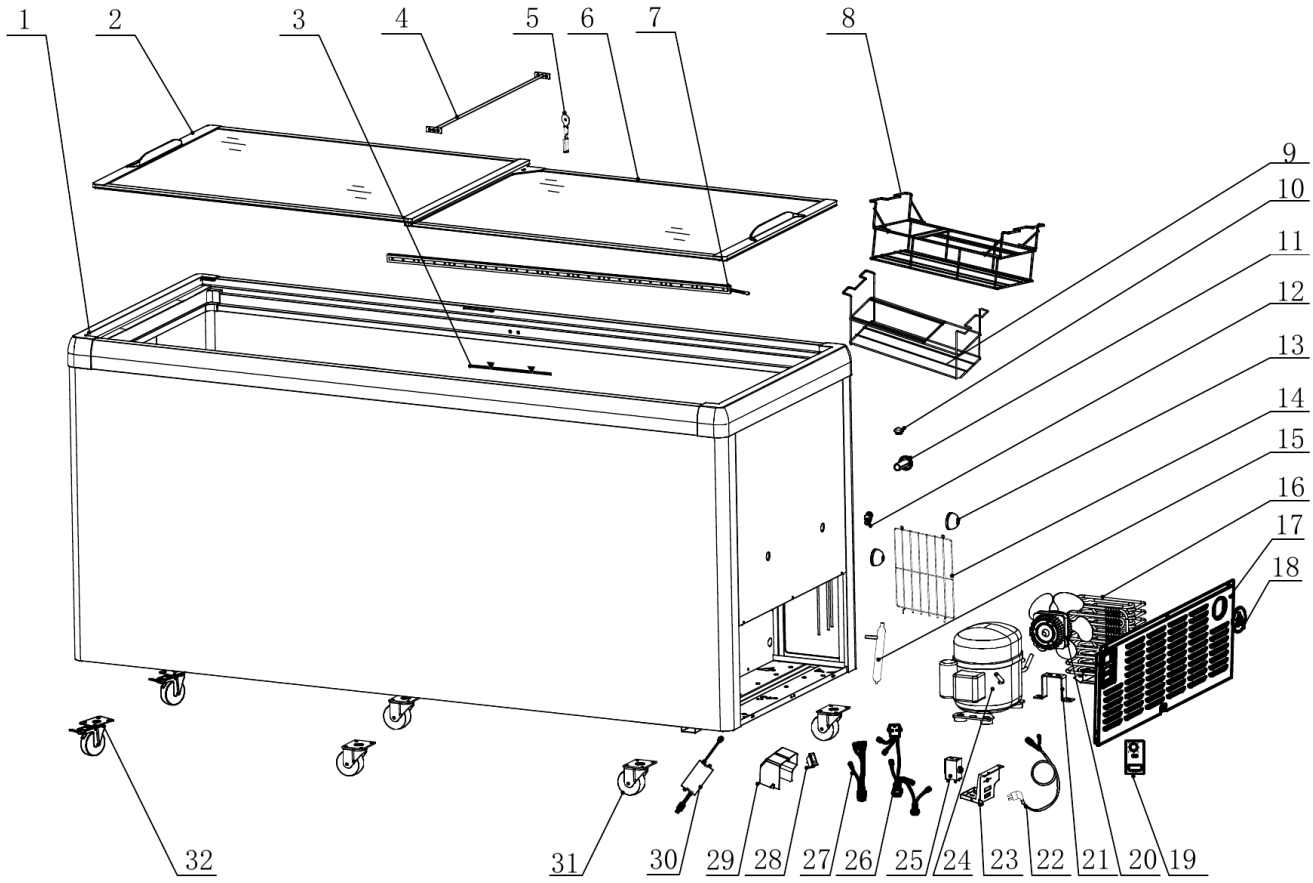

1950 Joe McIntosh Rd
Plant City, FL 33565
800.441.4014 | 813.870.0340
www.excellenceindustries.com

©October 2026 Excellence Industries

HBG-4HC

PARTS INDEX

Item	Parts name in EN	Code	Qty
5	LOCK	122-20-1000	
7	LED LIGHT	118-53-0503	
8	BASKET	110-20-0204	
9	BASKET	110-20-0209	
10	PLUG	801-50-0100	
11	WATER TUBE	801-20-0900	
13	BUMPER	101-20-1710	
14	REAR COVER	102-20-0704	
15	FILTER DRYER	101-20-0502	
16	EXTERNAL CONDENSER	107-60-0500	
17	COVER	107-20-0302	
18	COVER SOCKET	107-20-0400	
20	FAN	105-60-0101	
21	FAN BRACKET	101-70-0201	
22	POWER CABLE	107-61-0319	
23	CONTROL KBT	102-60-0108	
24	COMPRESSOR	EM2X3113U	
25	THERMOSTAT	108-70-0100	
28	LED SWITCH	102-60-0400	
29	CONTROL KBT COVER	102-60-0110	
30	TRANSFORMER	119-60-0610	
31	NON-LOCKING CASTER	101-20-1100	
32	LOCKING CASTER	101-20-1101	
2 & 6	LID SET	151-30-0000 / 151-40-0000	

Only source-listed parts are included. Blank fields were not provided.

1950 Joe McIntosh Rd
Plant City, FL 33565
800.441.4014 | 813.870.0340
www.excellenceindustries.com

©October 2026 Excellence Industries

HBG-7HC

PARTS INDEX

Item	Parts name in EN	Code	Qty
5	LOCK	122-20-1000	
7	LED LIGHT	119-60-0502	
8	BASKET	110-20-0204	
9	BASKET	110-20-0209	
10	PLUG	801-50-0100	
11	WATER TUBE	801-20-0900	
13	BUMPER	101-20-1710	
14	REAR COVER	102-20-0704	
15	FILTER DRYER	101-20-0502	
16	EXTERNAL CONDENSER	107-60-0500	
17	COVER	107-20-0302	
18	COVER SOCKET	107-20-0400	
20	FAN	105-60-0101	
21	FAN BRACKET	101-70-0201	
22	POWER CABLE	107-61-0319	
23	CONTROL KBT	102-60-0108	
24	COMPRESSOR	EM2X3117U	
25	THERMOSTAT	108-70-0100	
28	LED SWITCH	102-60-0400	
29	CONTROL KBT COVER	102-60-0110	
30	TRANSFORMER	119-60-0610	
31	NON-LOCKING CASTER	101-20-1100	
32	LOCKING CASTER	101-20-1101	
2 & 6	LID SET	111-31-0000 / 111-41-0000	

Only source-listed parts are included. Blank fields were not provided.

1950 Joe McIntosh Rd
Plant City, FL 33565
800.441.4014 | 813.870.0340
www.excellenceindustries.com

©October 2026 Excellence Industries

HBG-9HC

PARTS INDEX

Item	Parts name in EN	Code	Qty
5	LOCK	122-20-1000	
7	LED LIGHT	108-80-0304	
8	BASKET	110-20-0204	
9	BASKET	110-20-0209	
10	PLUG	801-50-0100	
11	WATER TUBE	801-20-0900	
13	BUMPER	101-20-1710	
14	REAR COVER	102-20-0704	
15	FILTER DRYER	101-20-0502	
16	EXTERNAL CONDENSER	107-60-0500	
17	COVER	107-20-0302	
18	COVER SOCKET	107-20-0400	
20	FAN	105-60-0101	
21	FAN BRACKET	101-70-0201	
22	POWER CABLE	107-61-0319	
23	CONTROL KBT	102-60-0108	
24	COMPRESSOR	EM2X3121U	
25	THERMOSTAT	108-70-0100	
28	LED SWITCH	102-60-0400	
29	CONTROL KBT COVER	102-60-0110	
30	TRANSFORMER	119-60-0610	
31	NON-LOCKING CASTER	101-20-1100	
32	LOCKING CASTER	101-20-1101	
2 & 6	LID SET	110-31-0000 / 110-41-0000	

Only source-listed parts are included. Blank fields were not provided.

1950 Joe McIntosh Rd
Plant City, FL 33565
800.441.4014 | 813.870.0340
www.excellenceindustries.com

©October 2026 Excellence Industries

HBG-10HC

PARTS INDEX

Item	Parts name in EN	Code	Qty
5	LOCK	122-20-1000	
7	LED LIGHT	104-54-0303	
8	BASKET	110-20-0204	
9	BASKET	110-20-0209	
10	PLUG	801-50-0100	
11	WATER TUBE	801-20-0900	
13	BUMPER	101-20-1710	
14	REAR COVER	102-20-0704	
15	FILTER DRYER	101-20-0502	
16	EXTERNAL CONDENSER	107-60-0500	
17	COVER	107-20-0302	
18	COVER SOCKET	107-20-0400	
20	FAN	105-60-0101	
21	FAN BRACKET	101-70-0201	
22	POWER CABLE	107-61-0319	
23	CONTROL KBT	102-60-0108	
24	COMPRESSOR	EM2X3125U	
25	THERMOSTAT	108-70-0100	
28	LED SWITCH	102-60-0400	
29	CONTROL KBT COVER	102-60-0110	
30	TRANSFORMER	119-60-0610	
31	NON-LOCKING CASTER	101-20-1100	
32	LOCKING CASTER	101-20-1101	
2 & 6	LID SET	113-31-0000 / 113-41-0000	

Only source-listed parts are included. Blank fields were not provided.

1950 Joe McIntosh Rd
Plant City, FL 33565
800.441.4014 | 813.870.0340
www.excellenceindustries.com

©October 2026 Excellence Industries

HBG-12HC

PARTS INDEX

Item	Parts name in EN	Code	Qty
4	BODY ROD	113-20-0200	
5	LOCK	122-20-1000	
7	LED LIGHT	116-60-0302	
8	BASKET	110-20-0204	
9	BASKET	110-20-0209	
10	PLUG	801-50-0100	
11	WATER TUBE	801-20-0900	
13	BUMPER	101-20-1710	
14	REAR COVER	102-20-0704	
15	FILTER DRYER	101-20-0502	
16	EXTERNAL CONDENSER	107-60-0500	
17	COVER	107-20-0302	
18	COVER SOCKET	107-20-0400	
20	FAN	105-60-0104	
21	FAN BRACKET	101-70-0201	
22	POWER CABLE	107-61-0338	
23	CONTROL KBT	102-60-0108	
24	COMPRESSOR	VESA7U	
25	THERMOSTAT	108-70-0100	
28	LED SWITCH	102-60-0400	
29	CONTROL KBT COVER	102-60-0110	
30	TRANSFORMER	119-60-0610	
31	NON-LOCKING CASTER	101-20-1100	
32	LOCKING CASTER	101-20-1101	
2 & 6	LID SET	112-30-0000 / 112-40-0000	

Only source-listed parts are included. Blank fields were not provided.

1950 Joe McIntosh Rd
Plant City, FL 33565
800.441.4014 | 813.870.0340
www.excellenceindustries.com

©October 2026 Excellence Industries