Excellence Industries

Profit from the Power of Partnership.



DSS-F

STAINLESS STEEL FREEZER

KEY FEATURES

- Stainless steel exterior
- Precoated aluminum interior
- Automatic defrost
- Lock and key fitted as standard
- Self-closing solid doors, open to 180°
- 8.5-foot cord
- Environmentally friendly R-290 refrigerant
- Temperature range of -10°F to +10°F

ADVANTAGES

- Plastic recessed door handles make them easy to grip
- Adjustable coated wire shelves are heavy duty and corrosion-resistant
- Evaporators with anti-corrosion treatment allows for longevity



DSS-42F

DOE LISTED

Complies with 2017 DOE standards for commercial freezers with doors

1950 Joe McIntosh Rd
Plant City, FL 33565
800.441.4014 | 813.870.0340
www.excellenceindustries.com

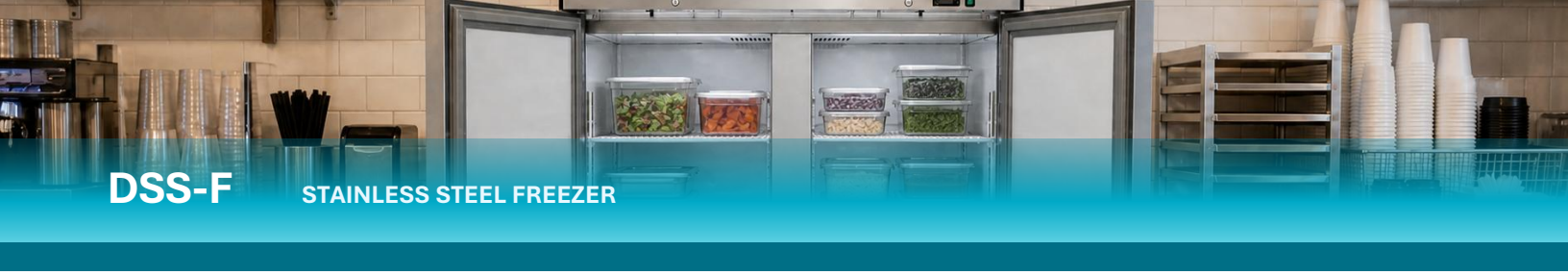

DSS-F STAINLESS STEEL FREEZER

SPECIFICATIONS

Model	DSS-19F	DSS-42F	DSS-66F
Cubic Feet	19.3	42.4	65.5
Approx. Weight (Net)	196 lb (89 kg)	333 lb (151 kg)	472 lb (214 kg)
Approx. Weight (Shipping)	231 lb (104.8 kg)	399 lb (181 kg)	551 lb (250 kg)
Running Amps	3.1	7.2	7.9
Compressor HP	1/3	1/2	1
Shelves	3	6	9
Container Quantity	42	21	13

NEMA 5-15P



115 / 60 / 1

AVAILABLE OPTIONS

- N/A

PRODUCT INFORMATION

Click or scan QR to access spec sheets and technical information

DSS-19F

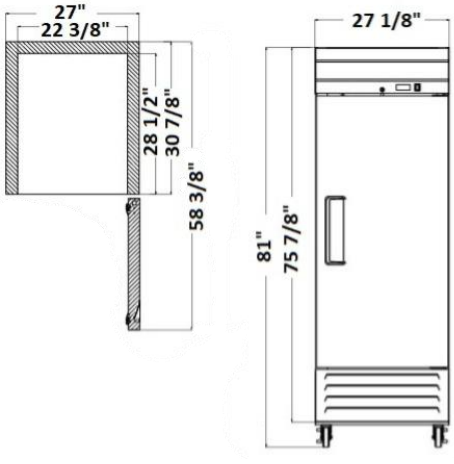

DSS-F (SIDE)

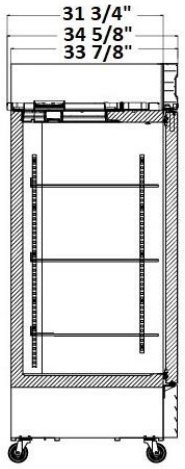

DSS-42F

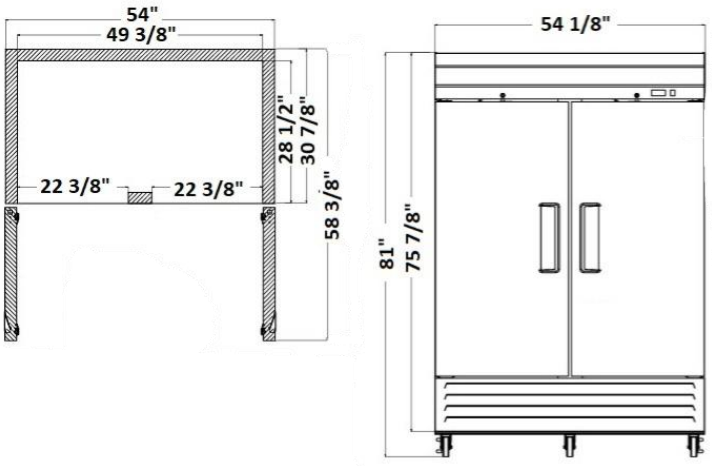

DSS-66F

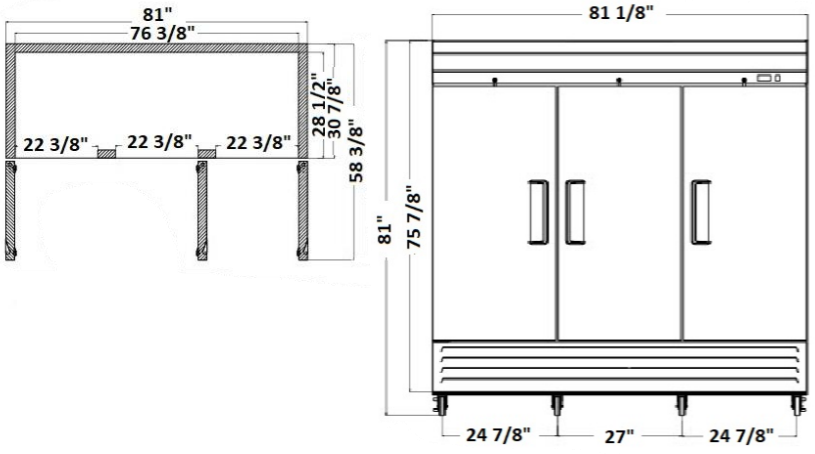

NOTE: Dimensions are in inches.
NOTE: Dimensions are all nominal lengths, use final spec sheet for exact data and model availability.
NOTE: Shipping weight does not include weight of pallets when needed.
NOTE: These storage units are designed for use in stores where temperature and humidity do not exceed listed operating conditions.
NOTE: We reserve the right to change specifications and product design without notice

©November 18, 2026 Excellence Industries