DSS-19F

EXPLODED VIEW

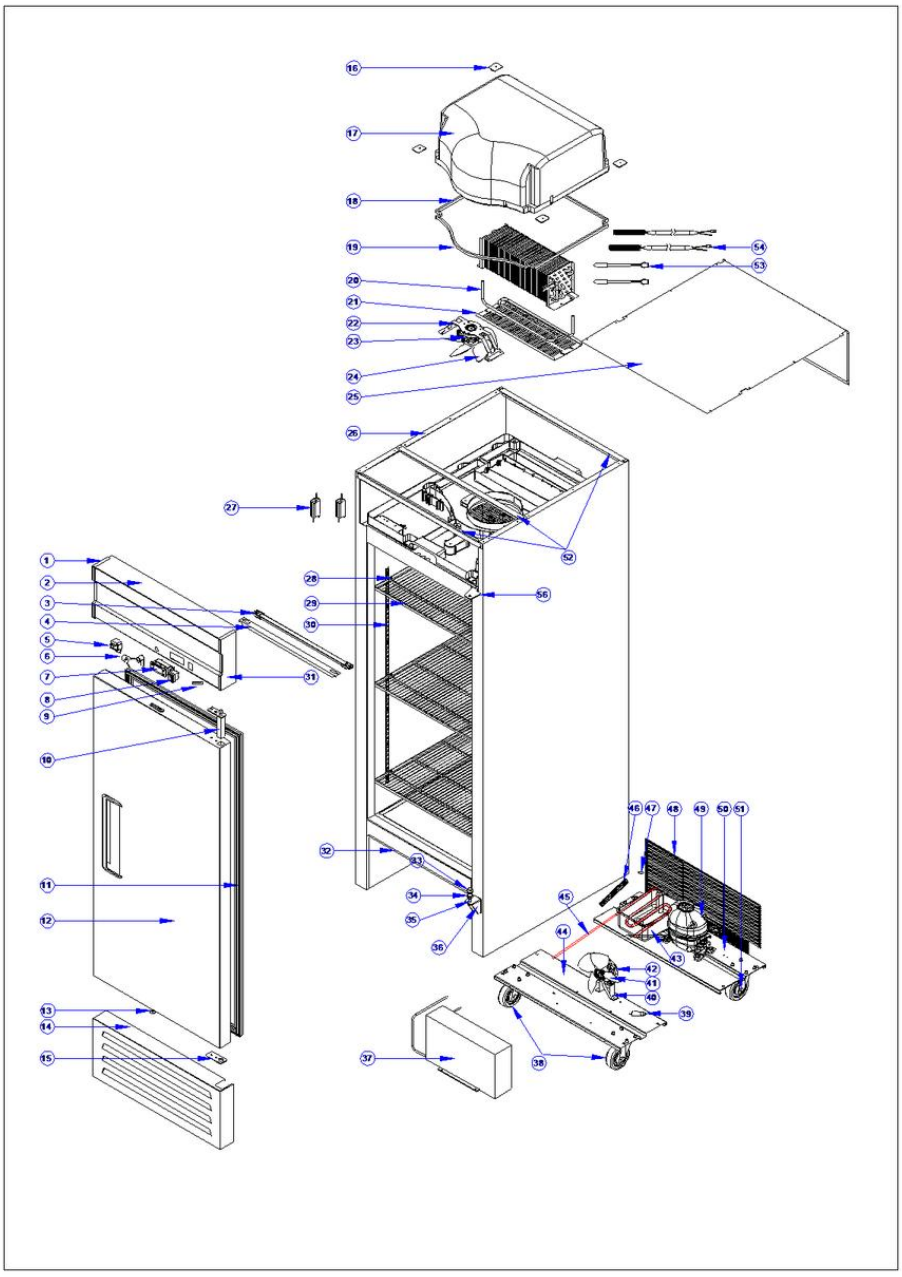

1950 Joe McIntosh Rd
Plant City, FL 33565
800.441.4014 | 813.870.0340
www.excellenceindustries.com

©October 2026 Excellence Industries

DSS-19F

PARTS INDEX - 1 OF 2

Item	Parts name in EN	Code	Qty
1	Left plastic cover for top panel	DL58301175	1
2	Top panel for solid door	DL58301688	1
3	LED light	DL60004655	1
4	Lamp baffle	DL58301684	1
5	Door switch/Fan-shape switch	DL00017160	1
6	Lock&keys	DL60002381	1
7	ThermostatDT-03	DL58301766	1
8	Rocker power switch RL2(P)Green	DL90001366	1
9	Power switch identification	DL58301172	1
10	Self-closing device	DL60004497	1
11	Door gasket	DL58301373	1
12	Foaming door without gasket	DL58301767	1
13	Cover of door's foaming hole	DL00009097	1
14	Bottom front grill	DL58301696	1
15	Hinge shaft reinforcement plate	DL58301315	1
16	Foam fixing plate	DL60502102	4
17	Insulation cover	DL60502091	1
18	Internal seal strip	DL60502064	1
19	Evaporator-coated	DL58301705	1
20	Heating tube	DL58301578	1
21	Waterproof plate/water-stop plate	DL60502068	1
22	Fan bracket for Evaporator Fan	DL67801432	1
23	Evaporator Fan NEC4810	DL11802777	1
24	Fan blade for Evaporator Fan	DL00005279	1
25	Top cover	DL58301607	1
26	Freezer foam body	DL58301769	1
27	Switching Mode Power Supply	DL11802783	2
28	Shelf clip	DL22801105	12
29	Shelf	DL58301534	3
30	Rack	DL58301114	4
31	Right plastic cover for top panel	DL58301176	1
32	fixing bracket of bottom front grill	DL58301655	1
33	Upper bushing/Upper sleeve	DL60001015	1
34	Bottom rotating shaft	DL60001748	1
35	Hinge shaft	DL02201204	1
36	Bottom hinge	DL58301209	1
37	Condenser	DL60501199	1

Only source-listed parts are included. Blank fields were not provided.

1950 Joe McIntosh Rd
Plant City, FL 33565
800.441.4014 | 813.870.0340
www.excellenceindustries.com

©October 2026 Excellence Industries

DSS-19F

PARTS INDEX - 2 OF 2

Item	Parts name in EN	Code	Qty
38	Caster with brake	DL58301609	2
39	Filter	DL27601330	1
40	Fan bracket for Condenser Fan	DL23501072	1
41	Fan blade for Condenser Fan	DL00005279	1
42	Condenser Fan NEC4810	DL11802777	1
43	Evaporation pan/Water tray	DL18801673	1
44	Bottom bar/plate	DL58301748	1
45	Connection pipe	DL58301489	1
46	Drain hose(white)	DL00009516	1
47	Hose clamp	DL00001139	1
48	Back grill for engine room	DL58301701	1
49	Compressor FTY55U6ML	DL00017444	1
50	Compressor bottom plate	DL58301749	1
51	Caster without brake	DL58301610	2
52	Top support for the engine room	DL58301528	3
53	Temperature detection wire/Senser/Probe/Thermistor	DL58301730	2
54	Fuse for Heating tube	DL12901507	2
56	Right up hinge for solid door	DL12901512	1

Only source-listed parts are included. Blank fields were not provided.

1950 Joe McIntosh Rd
Plant City, FL 33565
800.441.4014 | 813.870.0340
www.excellenceindustries.com

©October 2026 Excellence Industries

DSS-42F

EXPLODED VIEW

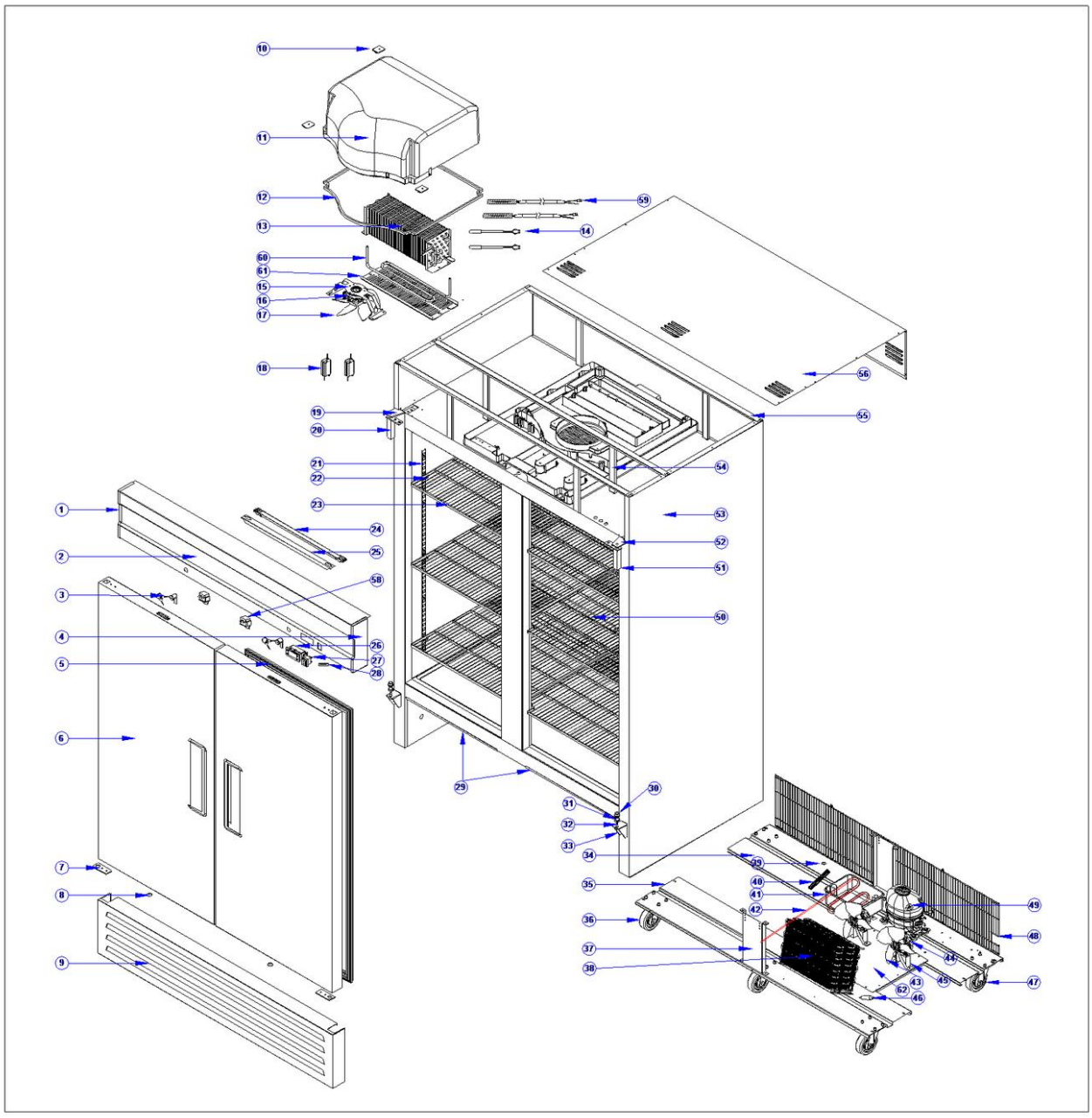

1950 Joe McIntosh Rd
Plant City, FL 33565
800.441.4014 | 813.870.0340
www.excellenceindustries.com

©October 2026 Excellence Industries

DSS-42F

PARTS INDEX - 1 OF 2

Item	Parts name in EN	Code	Qty
1	Left plastic cover for top panel	DL58301175	1
2	Top panel for solid door	DL12901517	1
3	Lock&keys	DL60002381	2
4	Right plastic cover for top panel	DL58301176	1
5	Door gasket	DL58301373	2
6	Foaming door without gasket	DL58301767	2
7	Hinge shaft reinforcement plate	DL58301315	2
8	Cover of door's foaming hole	DL00009097	2
9	Bottom front grill	DL12901429	1
10	Foam fixing plate	DL60502102	4
11	Insulation cover	DL60502091	1
12	Internal seal strip	DL60502064	1
13	Evaporator	DL12901424	1
14	Temperature detection wire/Senser/Probe/Thermistor	DL58301730	2
15	Fan bracket for Evaporator Fan	DL67801432	1
16	Evaporator Fan NEC4810	DL11802777	1
17	Fan blade for Evaporator Fan	DL00005279	1
18	Switching Mode Power Supply	DL11802783	2
19	Left up hinge for solid door	DL12901511	1
20	Self-closing device	DL60004497	1
21	Rack	DL58301114	8
22	Shelf clip	DL22801105	24
23	Left Shelf	DL12901427	3
24	LED light	DL60004655	1
25	Lamp baffle	DL58301684	1
26	Thermostat DT-08	DL12901566	1
27	Rocker power switch RL2(P)Green	DL90001366	1
28	Power switch identification	DL58301172	1
29	fixing bracket of bottom front grill	DL58301655	2
30	Upper bushing/Upper sleeve	DL60001015	2
31	Bottom rotating shaft	DL60001748	2
32	Hinge shaft	DL02201204	2
33	Bottom hinge	DL58301209	2
34	Compressor bottom plate	DL12901567	1
35	Bottom bar/plate	DL12901568	1
36	Caster with brake	DL58301609	2

Only source-listed parts are included. Blank fields were not provided.

1950 Joe McIntosh Rd
Plant City, FL 33565
800.441.4014 | 813.870.0340
www.excellenceindustries.com

©October 2026 Excellence Industries

DSS-42F

PARTS INDEX - 2 OF 2

Item	Parts name in EN	Code	Qty
37	Middle mullion support	DL12901075	2
38	Condenser	DL12901202	1
39	Hose clamp	DL00001139	1
40	Drain pipe(white)	DL00009516	1
41	Evaporation pan/Water tray	DL18801673	1
42	Connection pipe	DL12901446	1
43	Fan blade for Condenser Fan	DL00005279	2
44	Condenser Fan NEC4810	DL11802777	2
45	Fan bracket for Condenser Fan	DL23501072	2
46	Filter	DL27601330	1
47	Caster without brake	DL58301610	4
48	Back grill for engine room	DL12901518	1
49	Compressor KK650XU	DL00017445	1
50	Right Shelf	DL12901428	3
51	Self-closing device	DL60004497	1
52	Right up hinge for solid door	DL12901512	1
53	Freezer foam body-twoo door	/	1
54	Upper engine room vertical support	DL12901544	6
55	Top support for the engine room	DL12901478	3
56	Top cover	DL12901557	1
58	Door switch/Fan-shape switch	DL00017160	1
59	Fuse for Heating tube	DL12901507	2
60	Heating tube	DL58301578	1
61	Waterproof plate/water-stop plate	DL60502068	1
62	Support for condenser	DL12901562	1

Only source-listed parts are included. Blank fields were not provided.

1950 Joe McIntosh Rd
Plant City, FL 33565
800.441.4014 | 813.870.0340
www.excellenceindustries.com

©October 2026 Excellence Industries

DSS-66F

EXPLODED VIEW

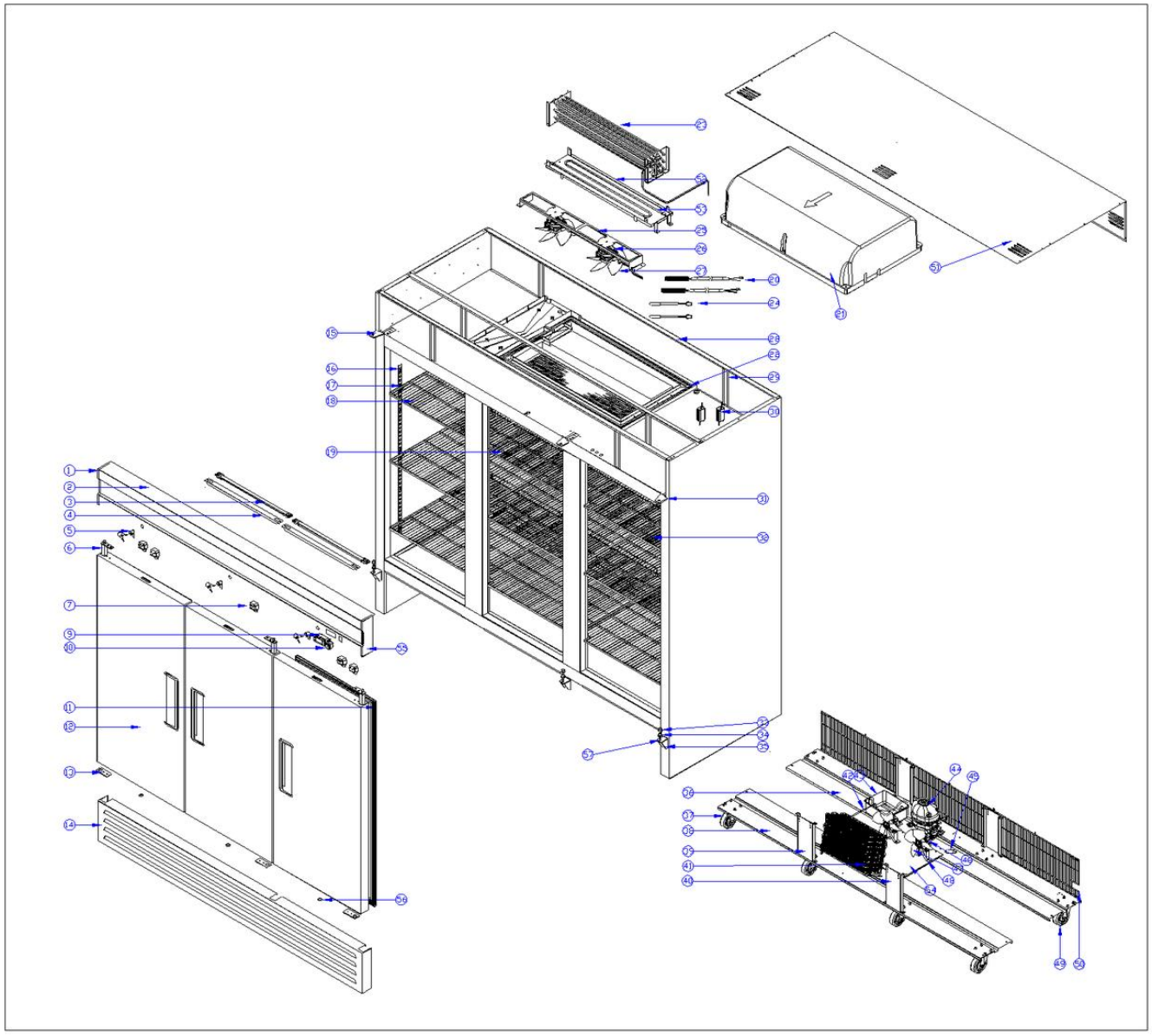

1950 Joe McIntosh Rd
Plant City, FL 33565
800.441.4014 | 813.870.0340
www.excellenceindustries.com

©October 2026 Excellence Industries

DSS-66F

PARTS INDEX - 1 OF 2

Item	Parts name in EN	Code	Qty
1	Left plastic cover for top panel	DL58301175	1
2	Top panel for solid door	DL21101252	1
3	LED light	DL60004655	2
4	Lamp baffle	DL58301684	2
5	Lock&keys	DL60002381	3
6	Self-closing device	DL60004497	3
7	Door switch/Fan-shape switch	DL00017160	3
8	Not specified in source		
9	Thermostat DT-08	DL12901566	1
10	Rocker power switch RL2(P)Green	DL90001366	1
11	Door gasket	DL58301373	3
12	Foaming door without gasket	DL58301767	3
13	Bottom hinge	DL58301209	3
14	Bottom front grill	DL21101253	1
15	Left up hinge for solid door	DL12901511	1
16	Rack	DL58301114	12
17	Shelf clip	DL22801105	36
18	Left Shelf	DL12901427	3
19	Middle shelf	DL21101250	3
20	Fuse for Heating tube	DL12901507	2
21	Insulation cover	DL11805431	1
22	Internal seal strip	DL21101336	1
23	Evaporator	DL21101197	1
24	Temperature detection wire/Senser/Probe/Thermistor	DL58301730	2
25	Fan bracket for Evaporator Fan	DL11805433	1
26	Evaporator Fan NEC4810	DL11802777	2
27	Fan blade for Evaporator Fan	DL00005279	2
28	Top support for the engine room	DL21101249	3
29	Upper engine room vertical support	DL12901544	6
30	Switching Mode Power Supply	DL11802783	2
31	Right up hinge for solid door	DL12901512	1
32	Right Shelf	DL12901428	3
33	Upper bushing/Upper sleeve	DL60001015	3
34	Bottom rotating shaft	DL60001748	3
35	Bottom hinge	DL58301209	3
36	Bottom bar/plate	DL21101330	1

Only source-listed parts are included. Blank fields were not provided.

1950 Joe McIntosh Rd
Plant City, FL 33565
800.441.4014 | 813.870.0340
www.excellenceindustries.com

©October 2026 Excellence Industries

DSS-66F

PARTS INDEX - 2 OF 2

Item	Parts name in EN	Code	Qty
37	Caster with brake	DL58301609	2
38	Compressor bottom plate	DL21101329	1
39	Middle mullion support 1	DL12901075	3
40	Middle mullion support 2	DL21101332	1
41	Condenser	DL12901202	1
42	Connection pipe	DL21101315	1
43	Evaporation pan/Water tray	DL18802728	1
44	Compressor NPT18LR	DL00017460	1
45	Filter	DL00004008	1
46	Condenser Fan NEC4810	DL11802777	2
47	Fan blade for Condenser Fan	DL00005279	2
48	Fan bracket for Condenser Fan	DL23501072	2
49	Caster without brake	DL58301610	6
50	Back grill for engine room	DL21101255	1
51	Top cover	DL21101331	1
52	Water tray under evaporator	DL11805434	1
53	Heating tube	DL21101267	1
54	Support for condenser	DL12901562	1
55	Right plastic cover for top panel	DL58301176	1
56	Cover of door's foaming hole	DL00009097	3
57	Hinge shaft	DL02201204	3

Only source-listed parts are included. Blank fields were not provided.

1950 Joe McIntosh Rd
Plant City, FL 33565
800.441.4014 | 813.870.0340
www.excellenceindustries.com

©October 2026 Excellence Industries