DD-8

EXPLODED VIEW

2024:America

Exploded View Of DD-8

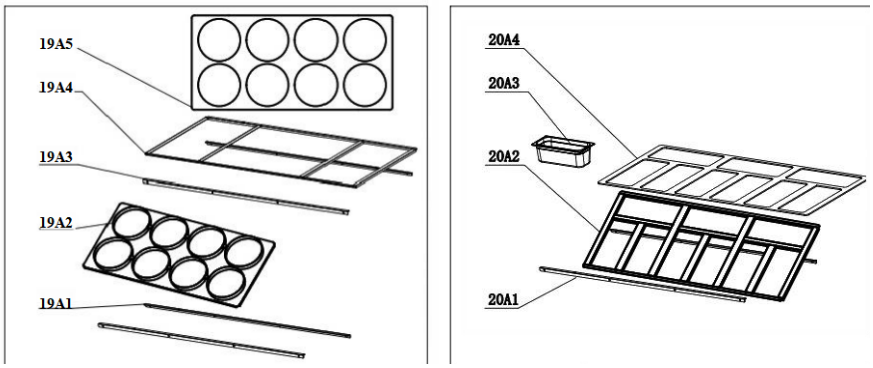

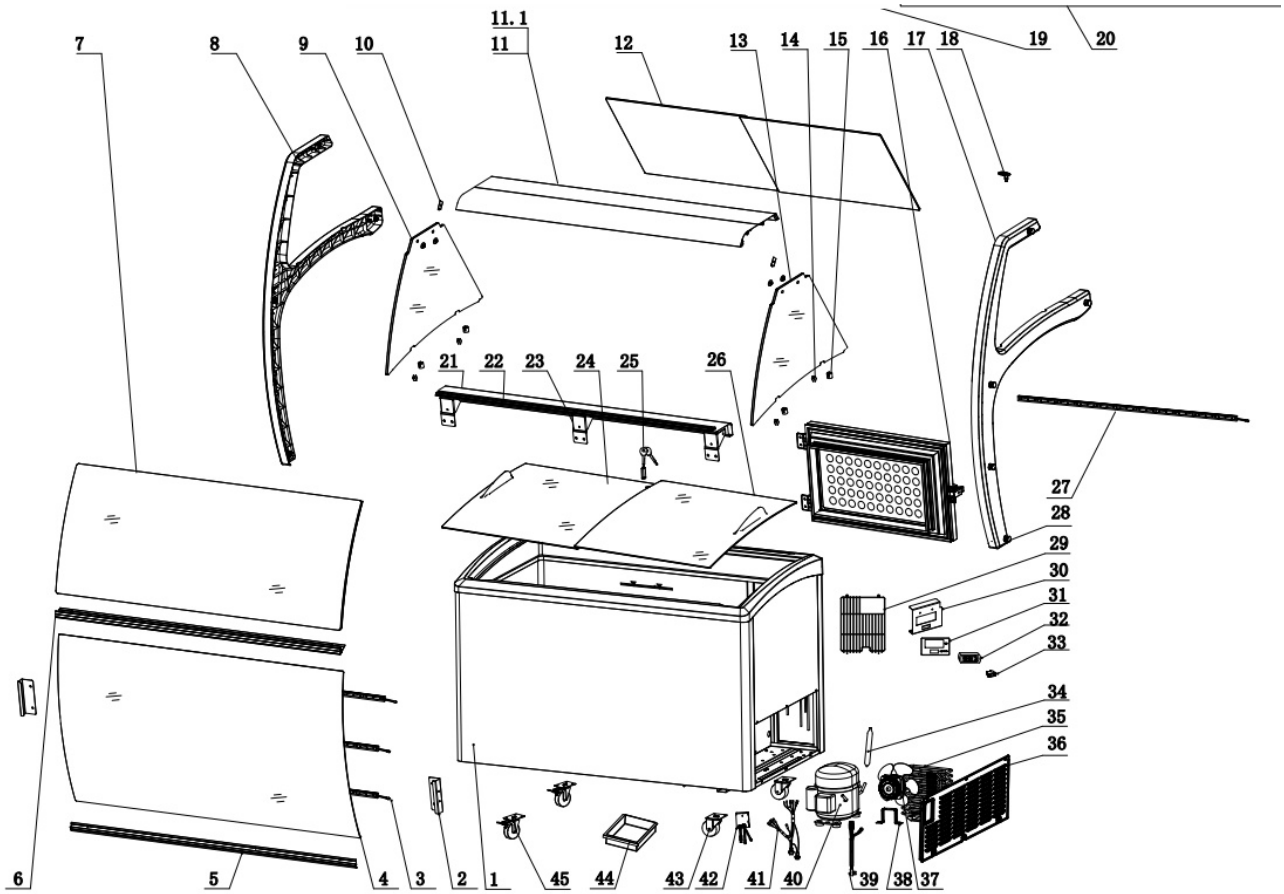

1950 Joe McIntosh Rd
Plant City, FL 33565
800.441.4014 | 813.870.0340
www.excellenceindustries.com

©October 2026 Excellence Industries

DD-8

PARTS INDEX - 1 OF 2

Item	Parts name in EN	Code	Qty
1	Cabinet	107-50-0001	1
2	Bracket for Lower front glass	107-80-0700	2
3	Front LED light	107-70-0901	3
4	Lower Front glass	107-85-0400	1
5	Bottom bracket	107-80-0400	1
6	Middle bracket	107-80-0300	1
7	Upper Front Glass	107-85-0300	1
8	Left cover	107-80-0100	1
9	Left glass	107-85-0100	1
10	Front glass bracket	107-85-0600	2
11	Top bracket/Front	107-80-0202	1
11.1	Top bracket/Rear	107-80-0203	1
12	Acrylic back door	107-85-0500	2
13	Right glass	107-85-0200	1
14	Gasket	107-80-1101	4
15	Glass clamp 2	140-60-0601	4
16	Back door	107-42-0000	1
17	Right cover	107-80-0101	1
18	Plug	403-53-0700	1
19	Shelf components	Optional parts	/
20	Shelf components	Optional parts	/
21	Back platform	107-80-0500	1
22	Back door guide	107-80-0900	1
23	Back platforn bracket	107-80-0600	3
24	Lower glass lid	107-43-0000	1
25	Lock &key	122-20-1006	1
26	Upper glass lid	107-32-0000	1
27	internal LED light	440-90-1400	1
28	Screw cover	107-80-0800	10
29	Rear cover	102-20-0706	1
30	Controller support plate	107-20-2401	1
31	Control panel	107-61-0227	1
32	Digital thernostat	245-20-1502	1
33	Switch	102-60-0400	1
34	Filter dryer	101-20-0503	1
35	External condenser	107-60-0503	1
36	Cover	107-20-0310	1

Only source-listed parts are included. Blank fields were not provided.

1950 Joe McIntosh Rd
Plant City, FL 33565
800.441.4014 | 813.870.0340
www.excellenceindustries.com

©October 2026 Excellence Industries

DD-8

PARTS INDEX - 2 OF 2

Item	Parts name in EN	Code	Qty
37	Fan	105-60-0101	1
38	Fan bracket	101-70-0205	1
39	Power cable	107-61-0319	1
40	Compressor(NUT55CR)	3150110400122	1
41	Controller connection wire	107-61-0121	1
42	Transformer	119-60-0609	1
43	Caster	102-50-0200	2
44	Water collector	101-20-0700	1
45	Caster with brake	102-50-0201	2

Only source-listed parts are included. Blank fields were not provided.

1950 Joe McIntosh Rd
Plant City, FL 33565
800.441.4014 | 813.870.0340
www.excellenceindustries.com

©October 2026 Excellence Industries