Excellence Industries

Profit from the Power of Partnership.



CVL

COUNTERTOP LIFT & ICE CREAM FREEZER

KEY FEATURES

- Small Footprint
- Light switch
- 12.75-foot cord / 9.75-foot accessible cord
- Environmentally friendly R-290a refrigerant
- Temperature range of -15°F to +15°F

ADVANTAGES

- Works well in tight retail, café, or back-counter spaces
- Simple controls make daily operation straightforward for staff
- Clean presentation fits into customer-facing or staff-access areas



CVL-1

DOE LISTED

Complies with 2017 DOE standards for freezer and ice cream freezer

1950 Joe McIntosh Rd
Plant City, FL 33565
800.441.4014 | 813.870.0340
www.excellenceindustries.com



CVL

COUNTERTOP LIFT & ICE CREAM FREEZER

SPECIFICATIONS

Model	CVL-1
Cubic Feet	0.4
Approx. Weight (Net)	26 lb (12 kg)
Approx. Weight (Shipping)	31 lb (14 kg)
Running Amps	1
Compressor HP	1/6
Display Area	0.67 sq ft
Container Quantity	848

NEMA 5-15P



115 / 60 / 1

PRODUCT INFORMATION

Click or scan QR to access spec sheets and technical information

AVAILABLE OPTIONS

- Graphics

CVL-1

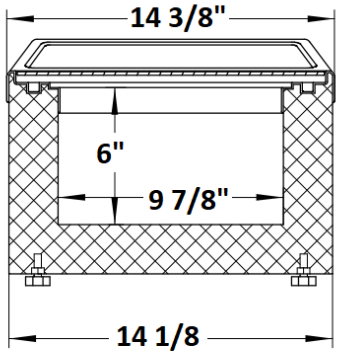

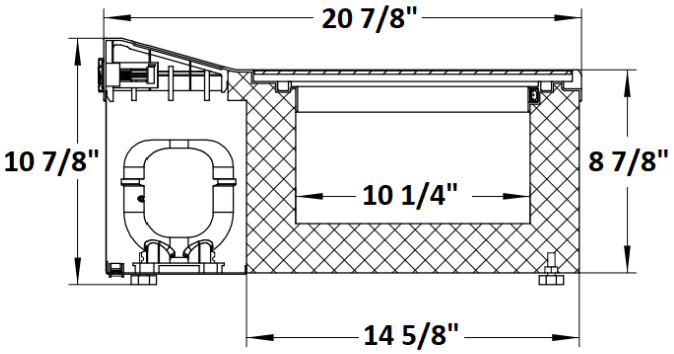

NOTE: Dimensions are in inches.
NOTE: Dimensions are all nominal lengths, use final spec sheet for exact data and model availability.
NOTE: Shipping weight does not include weight of pallets when needed.
NOTE: These merchandisers are designed for use in stores where temperature and humidity do not exceed listed operating conditions.
NOTE: We reserve the right to change specifications and product design without notice

©November 18, 2026 Excellence Industries