CVL-1

EXPLODED VIEW

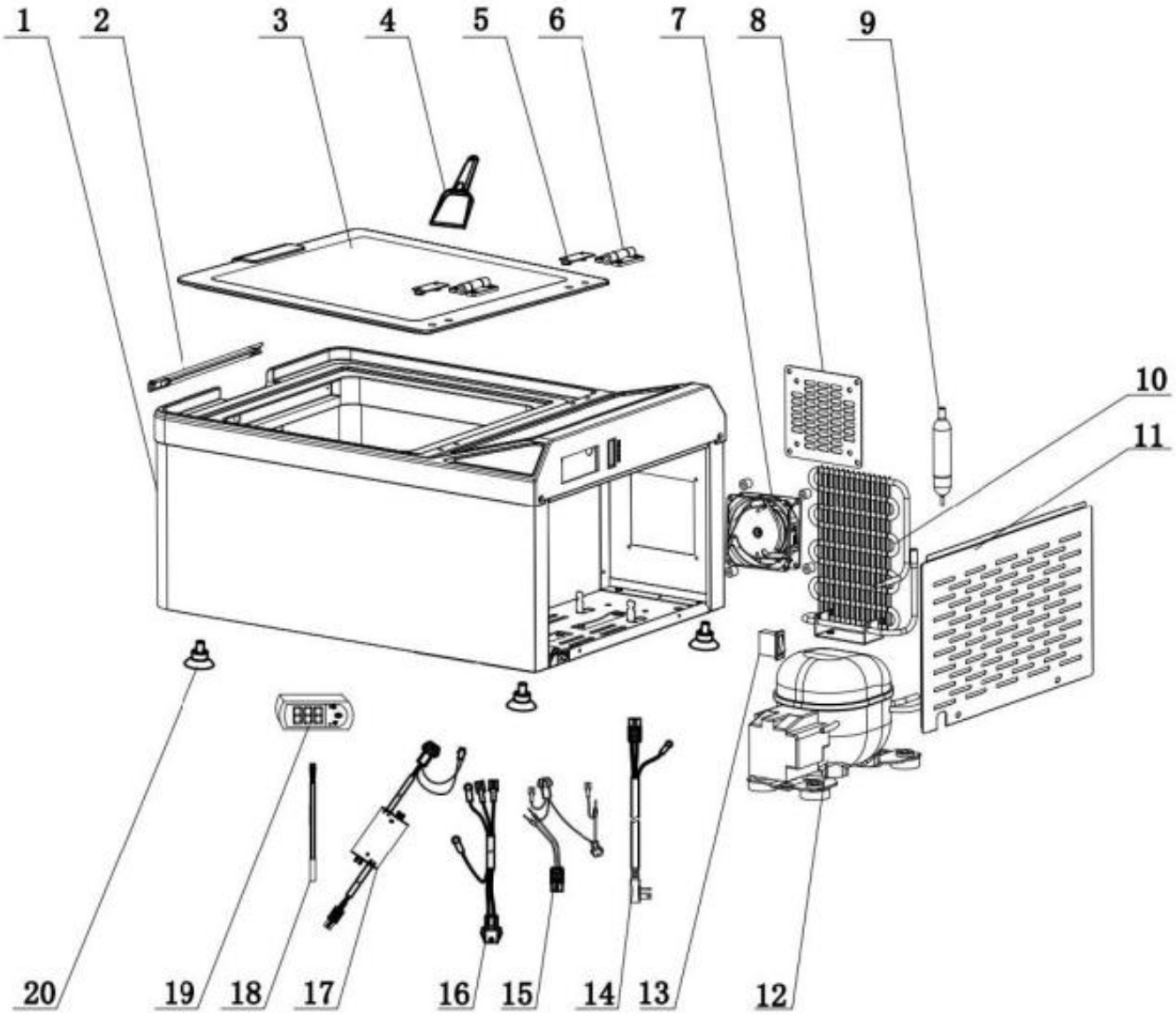

1950 Joe McIntosh Rd
Plant City, FL 33565
800.441.4014 | 813.870.0340
www.excellenceindustries.com

©October 2026 Excellence Industries

CVL-1

PARTS INDEX

Item	Parts name in EN	Code	Qty
2	LED LIGHT FOR CVL-1 MODEL	LT00-00184	
3	GLASS LID FOR CVL-1 MODEL	LD00-00547	
4	FROST REMOVAL FOR VARIOUS MODELS	AC00-00087	
5	SHIM FOR CVL-1 MODEL	LDHW-00094	
6	DOOR HINGE FOR CVL-1 MODEL	LDHG-00133	
7	FAN FOR CVL-1 MODEL	FM00-00119	
8	FAN BRACKET FOR CVL-1 MODEL	FM00-0012	
9	FILTER DRYER FOR CVL-1 MODEL	CPDR-00087	
10	EXTERNAL CONDENSER FOR CVL-1 MODEL	BDCN-00072	
11	GRILL COVER FOR CVL-1 MODEL	BDGR-00211	
12	COMPRESSOR (DK40BY1) FOR CVL-1 MODEL	CP00-00181	
13	SWITCH FOR CVL-1 MODEL	LTSW-00015	
14	POWER CABLE FOR CVL-1 MODEL	ELPC-00008	
15	CONTROLLER CONNECTION WIRE FOR CVL-1 MODEL	THCT-00055	
16	COMPRESSOR CONNECTION WIRE FOR CVL-1 MODEL	ELWI-00051	
17	TRANSFORMER FOR CVL-1 MODEL	LTTR-00055	
18	SENSOR WIRE FOR CVL-1 MODEL	THPB-00032	
19	ELECTRONIC THERMOSTAT FOR CVL-1 MODEL	THCT-00026	
20	ANCHOR BOLT FOR CVL-1 MODEL	ACHW-00110	

Only source-listed parts are included. Blank fields were not provided.

1950 Joe McIntosh Rd
Plant City, FL 33565
800.441.4014 | 813.870.0340
www.excellenceindustries.com

©October 2026 Excellence Industries