Excellence Industries

Profit from the Power of Partnership.



CTF-T

COUNTERTOP FREEZER & ICE CREAM FREEZER

KEY FEATURES

- Adjustable shelves
- Interior LED light
- Small footprint
- Aluminum door frame
- 8.25-foot cord
- Environmentally friendly R-600a refrigerant
- Temperature range of -15°F to +15°F

ADVANTAGES

- Fits easily into tight countertop spaces or small service areas
- Keeps frozen items organized and easy to present at customer height
- Lightweight display style makes it easier to reposition as layouts change



CTF-1T

DOE LISTED

Complies with 2017 DOE standards
for commercial freezer and ice cream freezer

1950 Joe McIntosh Rd
Plant City, FL 33565
800.441.4014 | 813.870.0340
www.excellenceindustries.com



CTF-T

COUNTERTOP FREEZER & ICE CREAM FREEZER

SPECIFICATIONS

Model	CTF-1T	CTF-2T
Cubic Feet	1.3	2.0
Approx. Weight (Net)	73 lb (33 kg)	82 lb (37 kg)
Approx. Weight (Shipping)	82 lb (37 kg)	93 lb (42 kg)
Running Amps	1.2	1.4
Compressor HP	1/5	1/5
Shelves	2	3
Container Quantity	375	250

NEMA 5-15P



115 / 60 / 1

AVAILABLE OPTIONS

- Lighted door graphic
- Graphics
- Left hinge units
- Lighted door frame (container orders only)

PRODUCT INFORMATION

Click or scan QR to access spec sheets and technical information

CTF-T SERIES

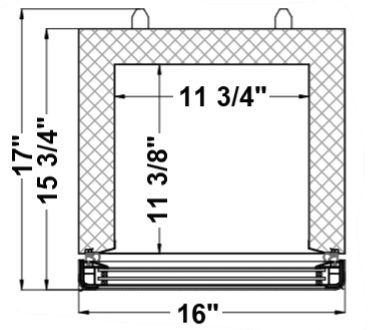

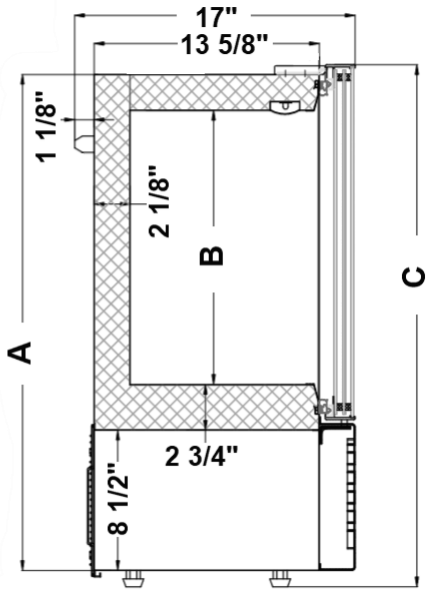

Model	A	B	C
CTF-1T	30”	16 1/2”	31 1/2”
CTF-2T	37 7/8”	24 3/8”	39 3/8”

NOTE: Dimensions are in inches.
NOTE: Dimensions are all nominal lengths, use final spec sheet for exact data and model availability.
NOTE: Shipping weight does not include weight of pallets when needed.
NOTE: These merchandisers are designed for use in stores where temperature and humidity do not exceed listed operating conditions.
NOTE: We reserve the right to change specifications and product design without notice

©November 18, 2026 Excellence Industries

Excellence Industries