CTF-T SERIES

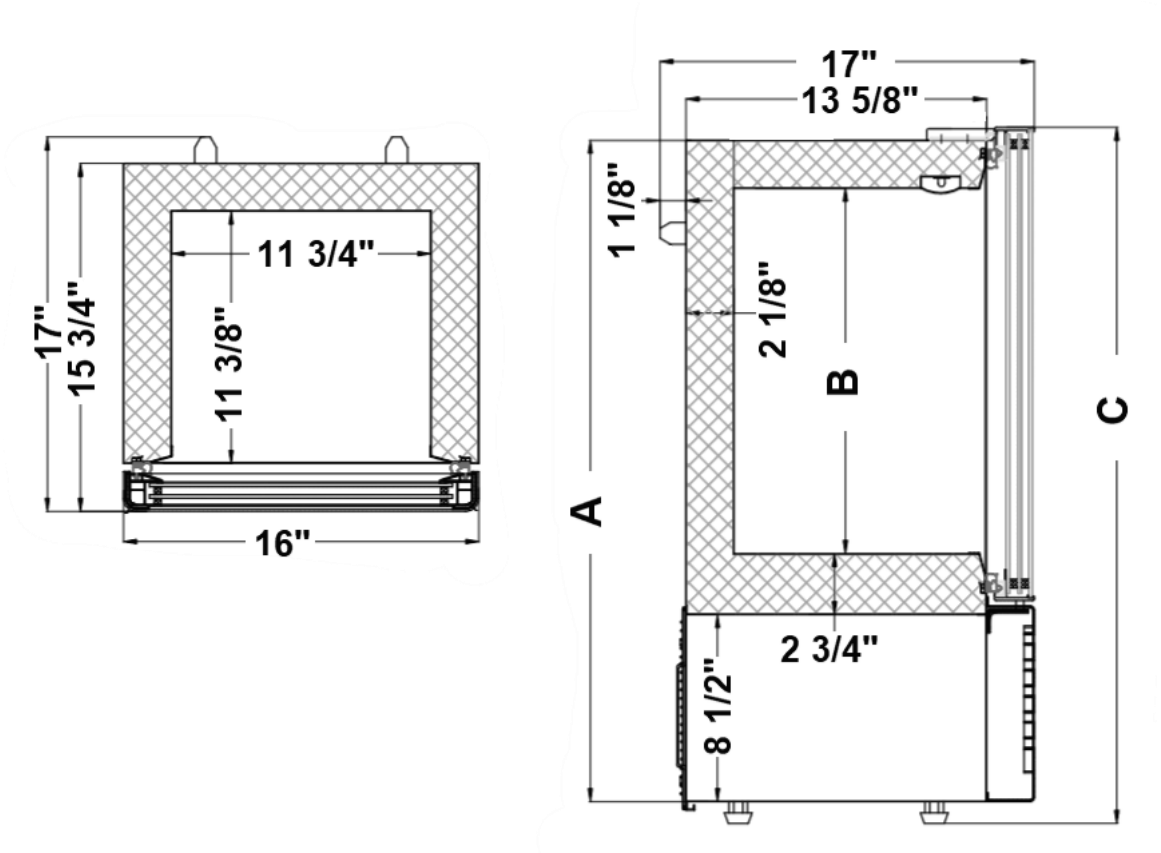

Model	A	B	C
CTF-1T	30”	16 1/2”	31 1/2”
CTF-2T	37 7/8”	24 3/8”	39 3/8”

1950 Joe McIntosh Rd
Plant City, FL 33565
800.441.4014 | 813.870.0340
www.excellenceindustries.com

©October 2026 Excellence Industries