CTF-1T

EXPLODED VIEW

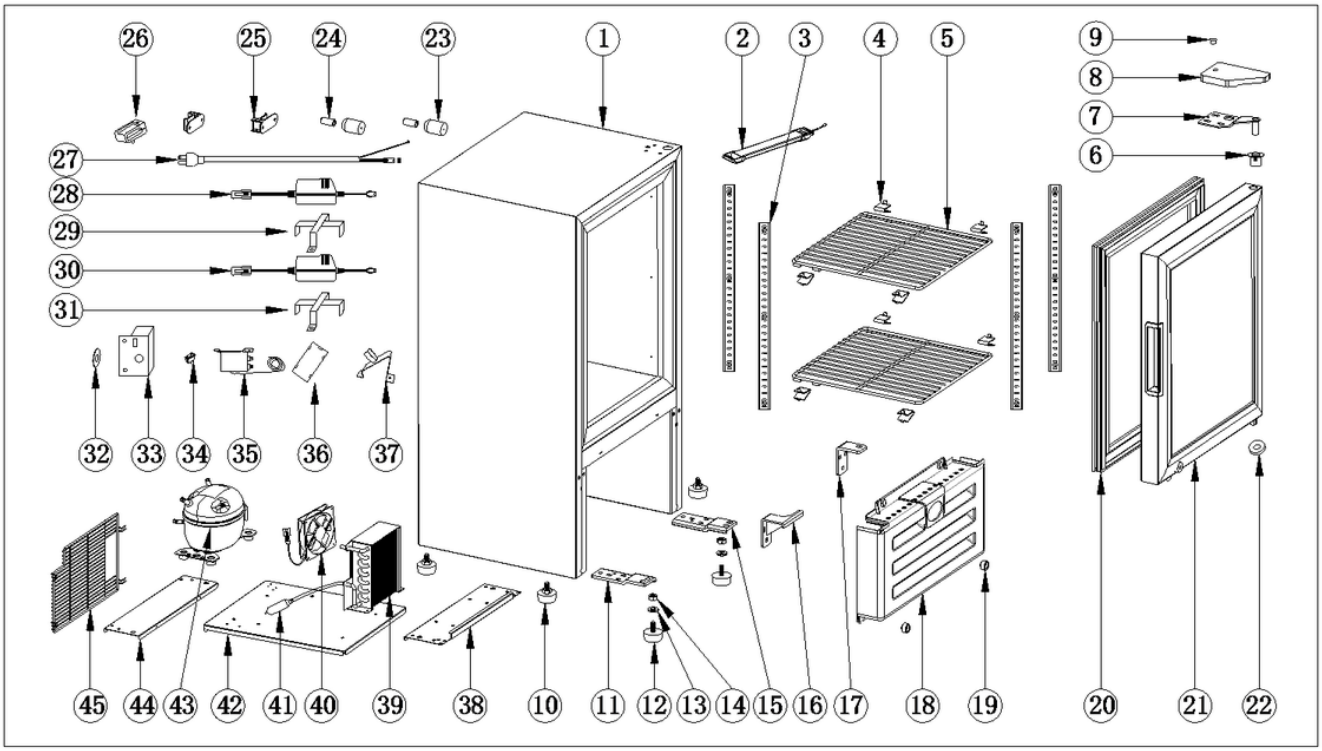

1950 Joe McIntosh Rd
Plant City, FL 33565
800.441.4014 | 813.870.0340
www.excellenceindustries.com

©October 2026 Excellence Industries

CTF-1T

PARTS INDEX - 1 OF 2

Item	Parts name in EN	Code	Qty
2	LED light	DL05701095	1
3	Rack	DL03604119	4
4	Shelf clip	DL09301358	8
5	White coated shelf	DL05701016	2
6	Big sleeve	DL03001598	1
7	Right top hinge	DL10101258	1
8	Hinge cover	DL05007115	1
9	Cap	DL05007077	1
10	Foot complete	DL27501495	4
11	Left bottom hinge	DL16801290	1
12	Foot	DL00010053	2
13	Screw M10	DL00003068	2
14	Bottom hinge washer	DL02201026	2
15	Right bottom hinge	DL16801169	1
16	Lock latch	DL05701032	1
17	Bottom hinge	DL05701094	1
18	Front grill	DL03604124	1
19	Cover retaining	DL23001023	2
20	Door gasket	DL03604123	1
21	Heated glass door	DL03604158	1
22	Bottom hinge washer	DL25801108	1
23	Rubber support	DL11601197	2
24	Rubber support plug	DL11601198	2
25	Bracket	DL25801186	2
26	Clip for cord	DL28801267	1
27	American plug	DL03604128	1
28	Transfromer	DL32001043	1
29	Transfromer box	DL02002132	1
30	Transformer for heated glass door	DL05701056	1
31	Transfromer box	DL16001143	1
32	Label for thermostat level	DL00011030	1
33	Thermostat box	DL02002272	1
34	Light switch	DL00013652	1
35	Thermostat	DL00013999	1
36	Cover for thermostat box	DL02002213	1
37	Filter bracket	DL09301585	1
38	Support for front baseboard	DL05701092	1

Only source-listed parts are included. Blank fields were not provided.

1950 Joe McIntosh Rd
Plant City, FL 33565
800.441.4014 | 813.870.0340
www.excellenceindustries.com

©October 2026 Excellence Industries

CTF-1T

PARTS INDEX - 2 OF 2

Item	Parts name in EN	Code	Qty
39	Condenser	DL03604027	1
40	Condenser fan	DL32001076	1
41	Filter	DL00004009	1
42	Compressor baseplate	DL05701072	1
43	Compressor	DL00017224	1
44	Support for back baseboard	DL05701093	1
45	Back grill	DL03604032	件

Only source-listed parts are included. Blank fields were not provided.

1950 Joe McIntosh Rd
Plant City, FL 33565
800.441.4014 | 813.870.0340
www.excellenceindustries.com

©October 2026 Excellence Industries

CTF-2T

EXPLODED VIEW

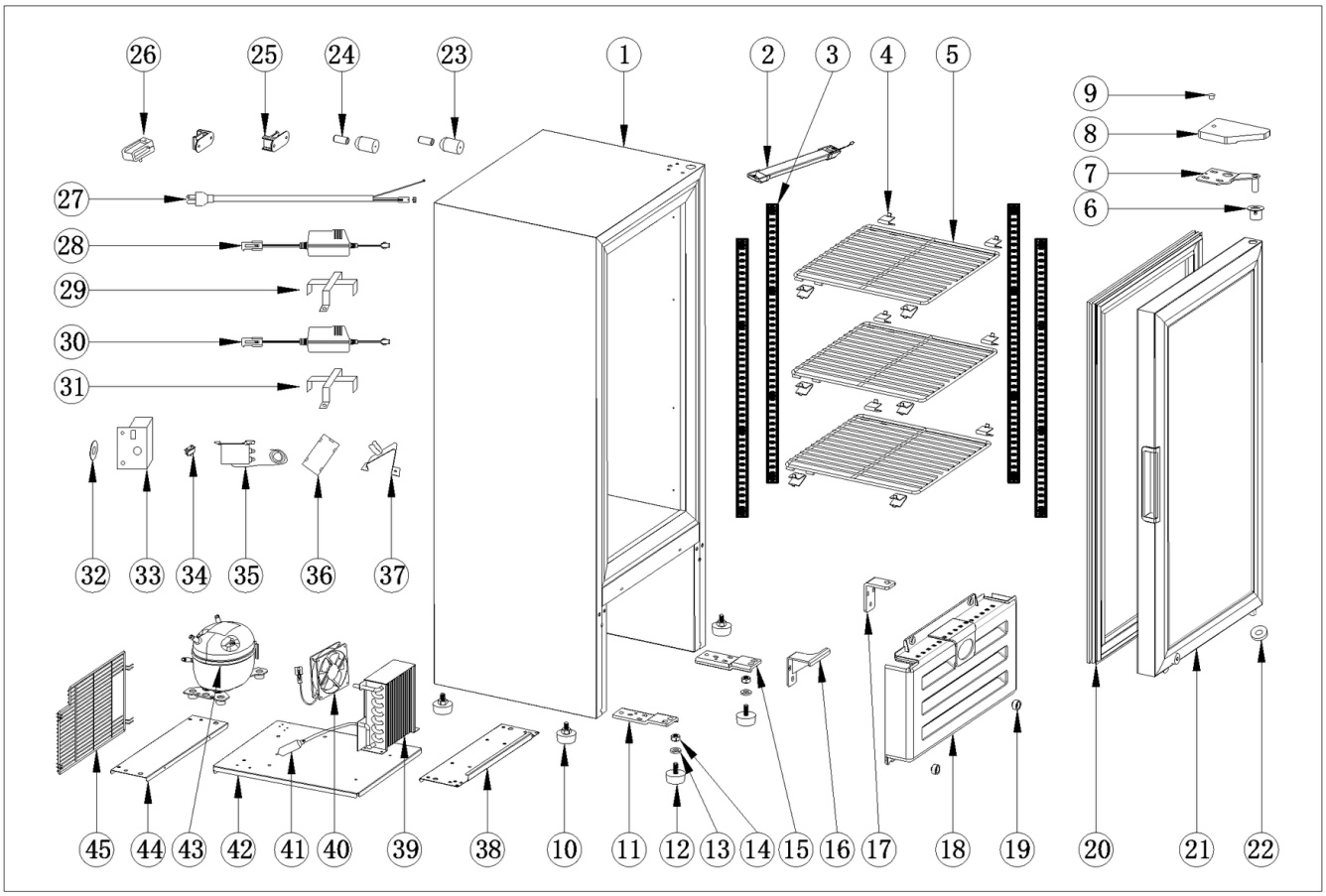

1950 Joe McIntosh Rd
Plant City, FL 33565
800.441.4014 | 813.870.0340
www.excellenceindustries.com

©October 2026 Excellence Industries

CTF-2T

PARTS INDEX - 1 OF 2

Item	Parts name in EN	Code	Qty
2	LED light	DL05701095	1
3	Rack	DL05701007	4
4	Shelf clip	DL09301358	12
5	White coated shelf	DL05701016	3
6	Big sleeve	DL03001598	1
7	Right top hinge	DL10101258	1
8	Hinge cover	DL05007115	1
9	Cap	DL05007077	1
10	Foot complete	DL27501495	4
11	Left bottom hinge	DL16801290	1
12	Foot	DL00010053	2
13	Screw M10	DL00003068	2
14	Bottom hinge washer	DL02201026	2
15	Right bottom hinge	DL16801169	1
16	Lock latch	DL05701032	1
17	Bottom hinge	DL05701094	1
18	Front grill	DL03604124	1
19	Cover retaining	DL23001023	2
20	Door gasket	DL05701019	1
21	Heated glass door	DL05701073	1
22	Bottom hinge washer	DL25801108	1
23	Rubber support	DL11601197	2
24	Rubber support plug	DL11601198	2
25	Bracket	DL25801186	2
26	Clip for cord	DL28801267	1
27	American plug	DL03604128	1
28	Transfromer	DL32001043	1
29	Transfromer box	DL02002132	1
30	Transformer for heated glass door	DL05701056	1
31	Transfromer box	DL16001143	1
32	Label for thermostat level	DL00011030	1
33	Thermostat box	DL02002272	1
34	Light switch	DL00013652	1
35	Thermostat	DL00013999	1
36	Cover for thermostat box	DL02002213	1
37	Filter bracket	DL09301585	1
38	Support for front baseboard	DL05701092	1

Only source-listed parts are included. Blank fields were not provided.

1950 Joe McIntosh Rd
Plant City, FL 33565
800.441.4014 | 813.870.0340
www.excellenceindustries.com

©October 2026 Excellence Industries

CTF-2T

PARTS INDEX - 2 OF 2

Item	Parts name in EN	Code	Qty
39	Condenser	DL03604027	1
40	Condenser fan	DL32001076	1
41	Filter	DL00004009	1
42	Compressor baseplate	DL05701072	1
43	Compressor	DL00017224	1
44	Support for back baseboard	DL05701093	1
45	Back grill	DL03604032	件

Only source-listed parts are included. Blank fields were not provided.

1950 Joe McIntosh Rd
Plant City, FL 33565
800.441.4014 | 813.870.0340
www.excellenceindustries.com

©October 2026 Excellence Industries