CTF-2HCMS

EXPLODED VIEW

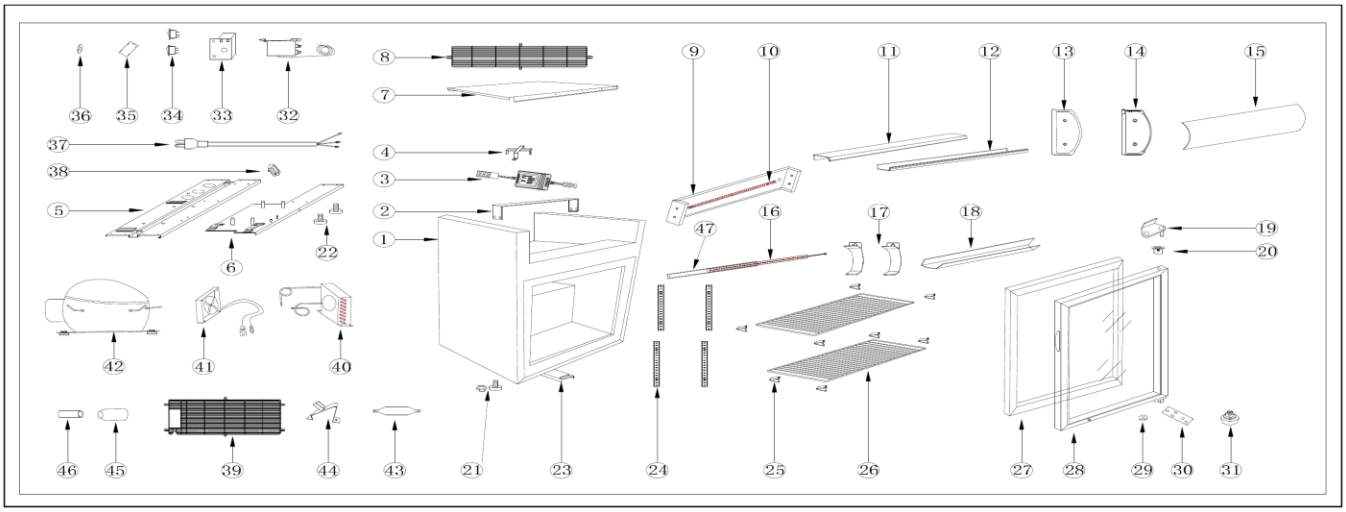

1950 Joe McIntosh Rd
Plant City, FL 33565
800.441.4014 | 813.870.0340
www.excellenceindustries.com

©October 2026 Excellence Industries

CTF-2HCMS

PARTS INDEX - 1 OF 2

Item	Parts name in EN	Code	Qty
2	bracket	DL05007284	1
3	transformer	DL09301442	1
4	transformer box	DL09301440	1
5	compressor base	DL05007774	1
6	compressor fixation plate	DL05007773	1
7	cabinet board	DL05007488	1
8	grill	DL05007474	1
9	fixation board of light	DL05007579	1
10	LED light	DL11601083	1
11	top frame of canopy	DL05007292	1
12	bottom frame of canopy	DL05007353	1
13	left cover of canopy	DL05007229	1
14	right cover of canopy	DL05007230	1
15	cover of canopy	DL05007318	1
16	LED light	DL05007458	1
17	fixation board of canopy	DL23502064	2
18	canopy	DL05007671	1
19	top right hinge	DL05007309	1
20	wire sleeve	DL00009230	1
21	foot complete	DL27501495	2
22	foot	DL00010053	2
23	lockpin	DL09301114	1
24	rack	DL05007463	4
25	clip	DL09301358	8
26	shelf	DL05007297	2
27	gasket	DL05007105	1
28	Triple glass door with 2 low-e glasses	DL05007604	1
29	bottom hinge washer	DL02201026	1
30	bottom hinge	DL09301282	1
31	extra foot	DL09301189	1
31	Bottom hinge washer	DL02201026	1
31	M8 nut	DL00003010	1
32	thermostat	DL00013999	1
33	thermostat box	DL02002395	1
34	light switch	DL00013652	2
35	thermostat box cover	DL02002213	1

Only source-listed parts are included. Blank fields were not provided.

1950 Joe McIntosh Rd
Plant City, FL 33565
800.441.4014 | 813.870.0340
www.excellenceindustries.com

©October 2026 Excellence Industries

CTF-2HCMS

PARTS INDEX - 2 OF 2

Item	Parts name in EN	Code	Qty
36	thermostat label	DL00011030	1
37	American power cord	DL09301480	1
38	wire clip	DL28801267	1
39	compressor base	DL05007161	1
40	condenser	DL05007392	1
41	condenser fan	DL09301318	1
42	compressor	DL00013983	1
43	drier	DL00004009	1
44	drier bracket	DL09301585	1
45	compartment grill	DL09301113	2
46	bumper	DL09301127	2
47	bumper pin	DL05007268	1

Only source-listed parts are included. Blank fields were not provided.

1950 Joe McIntosh Rd
Plant City, FL 33565
800.441.4014 | 813.870.0340
www.excellenceindustries.com

©October 2026 Excellence Industries

CTF-4HCMS

EXPLODED VIEW

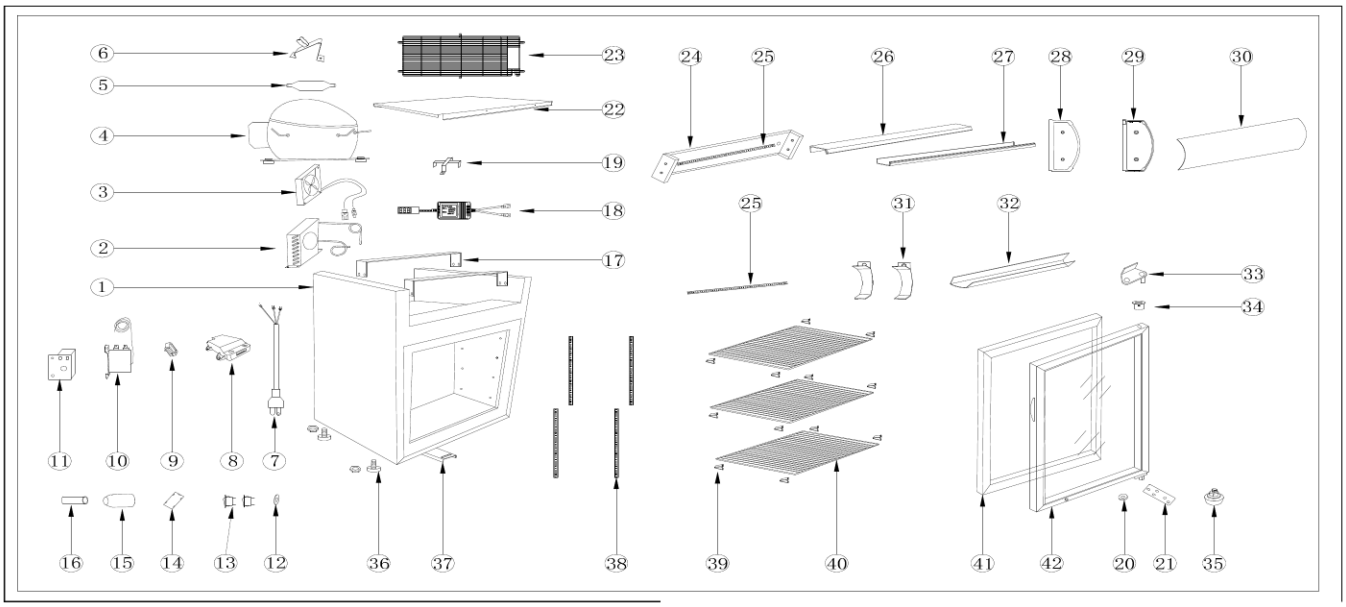

1950 Joe McIntosh Rd
Plant City, FL 33565
800.441.4014 | 813.870.0340
www.excellenceindustries.com

©October 2026 Excellence Industries

CTF-4HCMS

PARTS INDEX - 1 OF 2

Item	Parts name in EN	Code	Qty
1	cabinet		1
2	condenser	DL11601022	1
3	condenser fan	DL09301318	1
4	compressor	DL00013983	1
5	drier	DL00004009	1
6	drier bracket	DL09301585	1
7	American power cord	DL09301363	1
8	junction box	DL00009080	1
9	wire clip	DL28801267	1
10	thermostat	DL00013999	1
11	thermostat box	DL02002395	1
12	thermostat label	DL00011030	1
13	light switch	DL00013652	2
14	thermostat box cover	DL02002213	1
15	bumper	DL09301113	2
16	bumper pin	DL09301127	2
17	bracket	DL11601014	2
18	transformer	DL09301439	1
19	transformer box	DL09301440	1
20	bottom hinge washer	DL02201026	1
21	bottom hinge	DL09301282	1
22	cabinet board	DL11601095	1
23	compartment grill	DL11601087	1
24	fixation board of light	DL11601084	1
25	LED light	DL11601083	2
26	top frame of canopy	DL11601017	1
27	bottom frame of canopy	DL11601046	1
28	left cover of canopy	DL11601001	1
29	right cover of canopy	DL11601002	1
30	cover of canopy	DL11601019	1
31	fixation board of canopy	DL23502064	2
32	inner light canopy	DL11601144	1
33	top right hinge	DL05007309	1
34	wire sleeve	DL00009230	1
35	extra foot	DL09301189	1
35	Bottom hinge washer	DL02201026	1
35	M8 nut	DL00003010	1

Only source-listed parts are included. Blank fields were not provided.

1950 Joe McIntosh Rd
Plant City, FL 33565
800.441.4014 | 813.870.0340
www.excellenceindustries.com

©October 2026 Excellence Industries

CTF-4HCMS

PARTS INDEX - 2 OF 2

Item	Parts name in EN	Code	Qty
36	foot complete	DL27501495	4
37	lockpin	DL09301114	1
38	rack	DL09301549	4
39	clip	DL09301358	12
40	big shelf	DL09301364	3
41	gasket	DL09301221	1
42	Triple glass door with 2 low-e glasses	DL09301657	1

Only source-listed parts are included. Blank fields were not provided.

1950 Joe McIntosh Rd
Plant City, FL 33565
800.441.4014 | 813.870.0340
www.excellenceindustries.com

©October 2026 Excellence Industries