CTF-2HC

EXPLODED VIEW

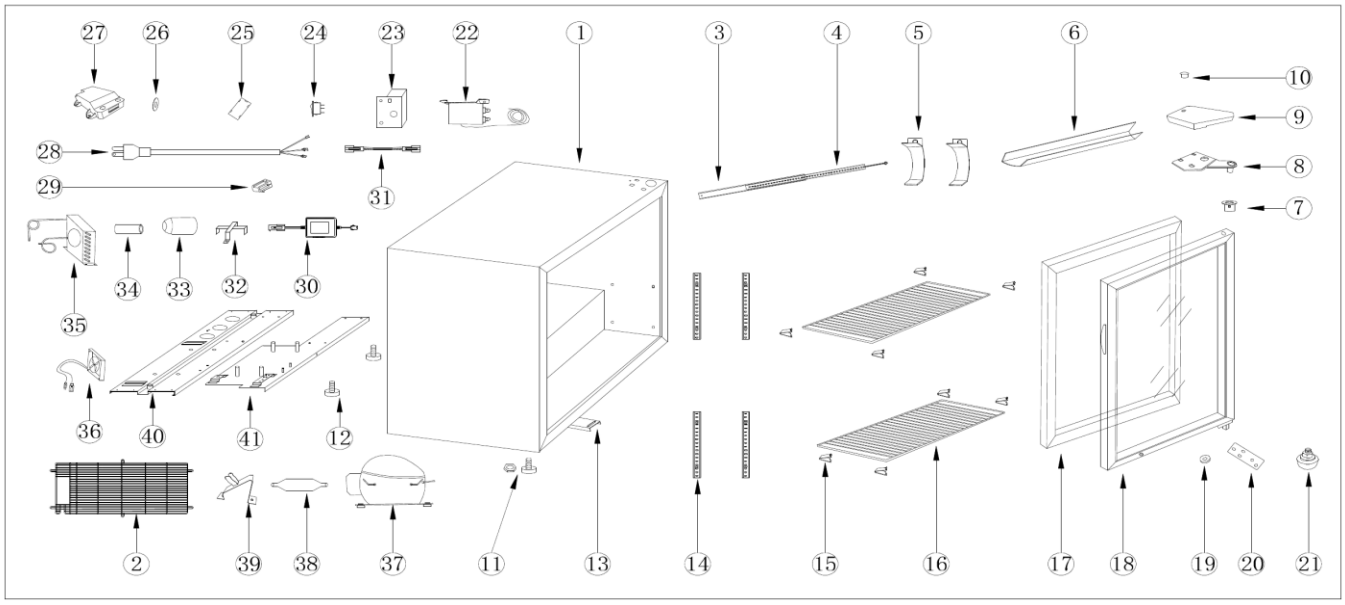

1950 Joe McIntosh Rd
Plant City, FL 33565
800.441.4014 | 813.870.0340
www.excellenceindustries.com

©October 2026 Excellence Industries

CTF-2HC

PARTS INDEX - 1 OF 2

Item	Parts name in EN	Code	Qty
1	Cabinet		1
2	compartment grill	DL05007161	1
3	LED light trough	DL05007268	1
4	LED light	DL05007458	1
5	fixation board of light	DL23502064	2
6	light cover	DL05007671	1
7	wire sleeve	DL00009230	1
8	top right hinge	DL09301281	1
9	hinge cover	DL05007115	1
10	cap	DL05007077	1
11	Foot complete	DL27501495	2
12	foot	DL00010053	2
13	lockpin	DL09301114	1
14	rack	DL05007463	4
15	clip	DL09301358	8
16	shelf	DL05007297	2
17	door gasket	DL05007105	1
18	Triple glass door with 2 low-e glasses	DL05007604	1
19	bottom hinge washer	DL02201026	1
20	bottom hinge	DL09301282	1
21	extra foot	DL09301189	1
21	Bottom hinge washer	DL02201026	1
21	M8 nut	DL00003010	1
22	thermostat	DL00013999	1
23	thermostat box	DL02002272	1
24	light switch	DL00013652	1
25	thermostat box cover	DL02002213	1
26	thermostat label	DL00011030	1
27	junction box	DL00009080	1
28	American power cord	DL09301363	1
29	wire clip	DL28801267	1
30	transformer	DL12501211	1
31	wire	DL05007778	1
32	tranformer box	DL02002132	1
33	bumper	DL09301113	2
34	bumper pin	DL09301127	2

Only source-listed parts are included. Blank fields were not provided.

1950 Joe McIntosh Rd
Plant City, FL 33565
800.441.4014 | 813.870.0340
www.excellenceindustries.com

©October 2026 Excellence Industries

CTF-2HC

PARTS INDEX - 2 OF 2

Item	Parts name in EN	Code	Qty
35	condenser	DL05007392	1
36	condenser fan	DL09301318	1
37	compressor	DL00013983	1
38	filter	DL00004009	1
39	filter support	DL09301585	1
40	compressor base	DL05007774	1
41	compressor fixation plate	DL05007773	1

Only source-listed parts are included. Blank fields were not provided.

1950 Joe McIntosh Rd
Plant City, FL 33565
800.441.4014 | 813.870.0340
www.excellenceindustries.com

©October 2026 Excellence Industries

CTF-3HC

EXPLODED VIEW

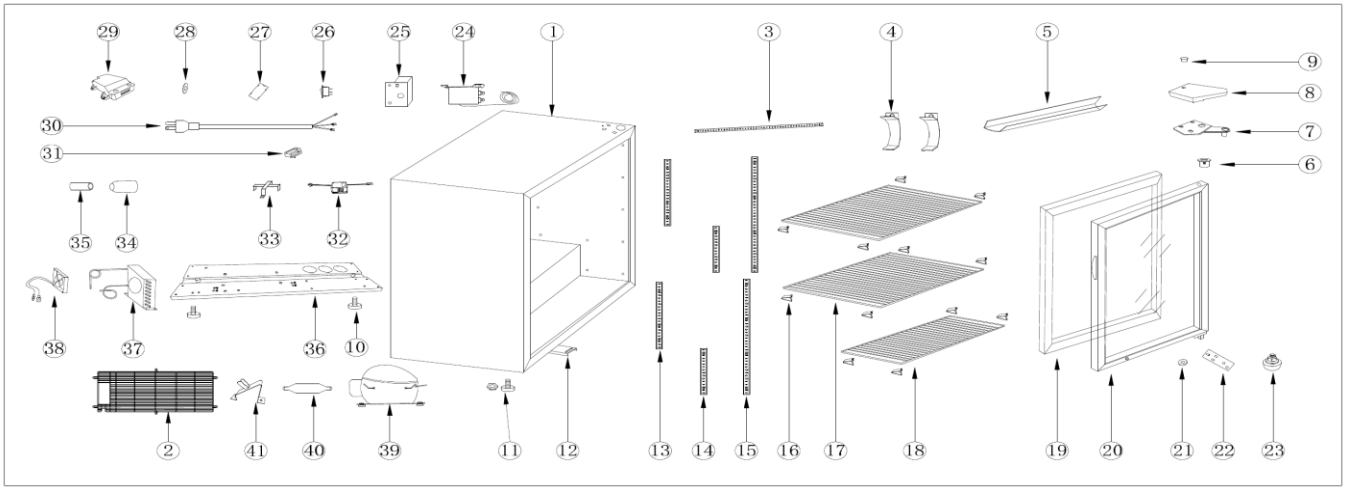

1950 Joe McIntosh Rd
Plant City, FL 33565
800.441.4014 | 813.870.0340
www.excellenceindustries.com

©October 2026 Excellence Industries

CTF-3HC

PARTS INDEX - 1 OF 2

Item	Parts name in EN	Code	Qty
1	cabinet		1
2	compartment grill	DL09301253	1
3	LED light	DL11601083	1
4	fixation board of light	DL23502064	2
5	light cover	DL11601144	1
6	wire sleeve	DL00009230	1
7	top right hinge	DL09301281	1
8	hinge cover	DL05007115	1
9	cap	DL05007077	1
10	foot	DL00010053	2
11	foot complete	DL27501495	2
12	lockpin	DL09301114	1
13	short rack	DL09301550	2
14	small rack	DL09301552	2
15	long rack	DL09301549	2
16	clip	DL09301358	12
17	big shelf	DL09301364	2
18	small shelf	DL09301365	1
19	gasket	DL09301221	1
20	Triple glass door with 2 low-e glasses	DL09301657	1
21	bottom hinge	DL02201026	1
22	bottom hinge washer	DL09301282	1
23	extra foot	DL09301189	1
23	Bottom hinge washer	DL02201026	1
23	M8 nut	DL00003010	1
24	thermostat	DL00013999	1
25	thermostat box	DL02002272	1
26	light switch	DL00013652	1
27	thermostat box cover	DL02002213	1
28	thermostat label	DL00011030	1
29	junction box	DL00009080	1
30	American power cord	DL09301363	1
31	wire clip	DL28801267	1
32	transformer	DL12501211	1
33	transformer box	DL02002132	1
34	bumper	DL09301113	2

Only source-listed parts are included. Blank fields were not provided.

1950 Joe McIntosh Rd
Plant City, FL 33565
800.441.4014 | 813.870.0340
www.excellenceindustries.com

©October 2026 Excellence Industries

CTF-3HC

PARTS INDEX - 2 OF 2

Item	Parts name in EN	Code	Qty
35	bumper pin	DL09301127	2
36	compressor base	DL09301737	1
37	condenser	DL09301467	1
38	condenser fan	DL09301318	1
39	compressor	DL00013983	1
40	drier	DL00004009	1
41	drier bracket	DL09301585	1

Only source-listed parts are included. Blank fields were not provided.

1950 Joe McIntosh Rd
Plant City, FL 33565
800.441.4014 | 813.870.0340
www.excellenceindustries.com

©October 2026 Excellence Industries