Excellence Industries

Profit from the Power of Partnership.



CR/CF

ECONOMY LINE UPRIGHT STORAGE COOLER & FREEZER

KEY FEATURES

- Gray interior with stainless steel floors
- Door with lock and key
- Auto defrost
- LED interior lighting
- Painted steel exterior and interior
- 6-foot cord
- Environmentally friendly R-290 refrigerant

ADVANTAGES

- Low maintenance condenser and electronic control with energy saving button help reduce maintenance and operating costs
- Heavy duty steel to provide for longer life



CR-20HC

DOE LISTED

CR - Complies with 2017 DOE standards for commercial cooler
CF - Complies with 2017 DOE standards for commercial freezer

1950 Joe McIntosh Rd
Plant City, FL 33565
800.441.4014 | 813.870.0340
www.excellenceindustries.com

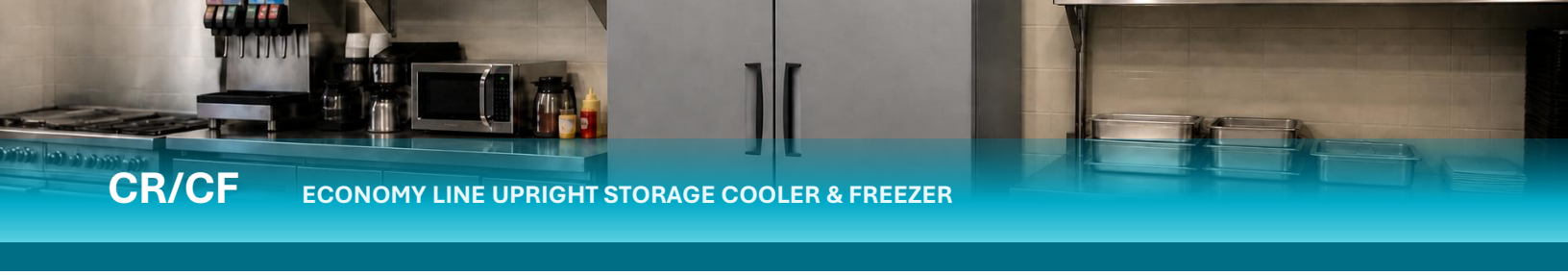

CR/CF ECONOMY LINE UPRIGHT STORAGE COOLER & FREEZER

SPECIFICATIONS

Model	CR-20HC	CR-43HC	CF-20HC	CF-43HC
Cubic Feet	20	43	20	43
Approx. Weight (Net)	276 lb (125 kg)	485 lb (220 kg)	276 lb (125 kg)	485 lb (220 kg)
Approx. Weight (Shipping)	286 lb (130 kg)	507 lb (230 kg)	286 lb (130 kg)	507 lb (230 kg)
Running Amps	2.5	4.3	4.4	4.7
Compressor HP	1/4	1/2	1/3	1/2
Temperature	+32°F to +39°F	+32°F to +39°F	-5°F to +25°F	-5°F to +25°F
Shelves	4	8	4	8
Container Quantity	45	24	45	24

NEMA 5-15P



115 / 60 / 1

PRODUCT INFORMATION

Click or scan QR to access spec sheets and technical information

AVAILABLE OPTIONS

- Extra shelves
- Casters

CR-20HC / CF-20HC

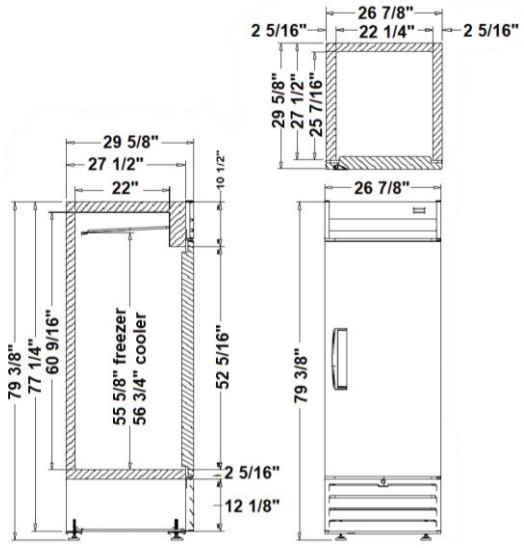

CR-43HC / CF-43HC

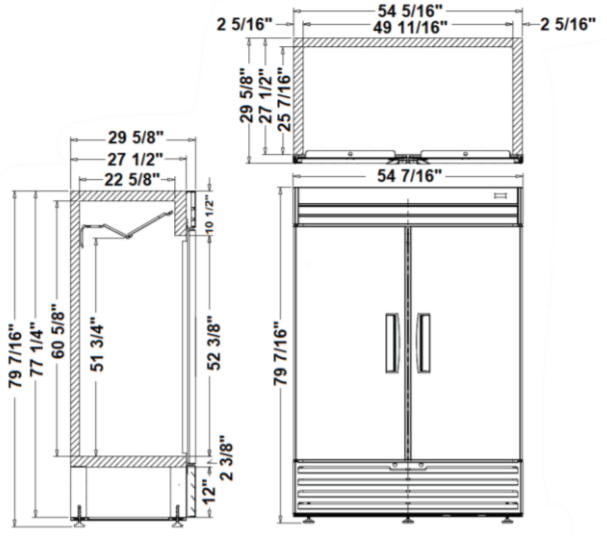

NOTE: Dimensions are in inches.
NOTE: Dimensions are all nominal lengths, use final spec sheet for exact data and model availability.
NOTE: Shipping weight does not include weight of pallets when needed.
NOTE: These storage units are designed for use in stores where temperature and humidity do not exceed listed operating conditions.
NOTE: We reserve the right to change specifications and product design without notice

©November 18, 2026 Excellence Industries