CR-20SSHC

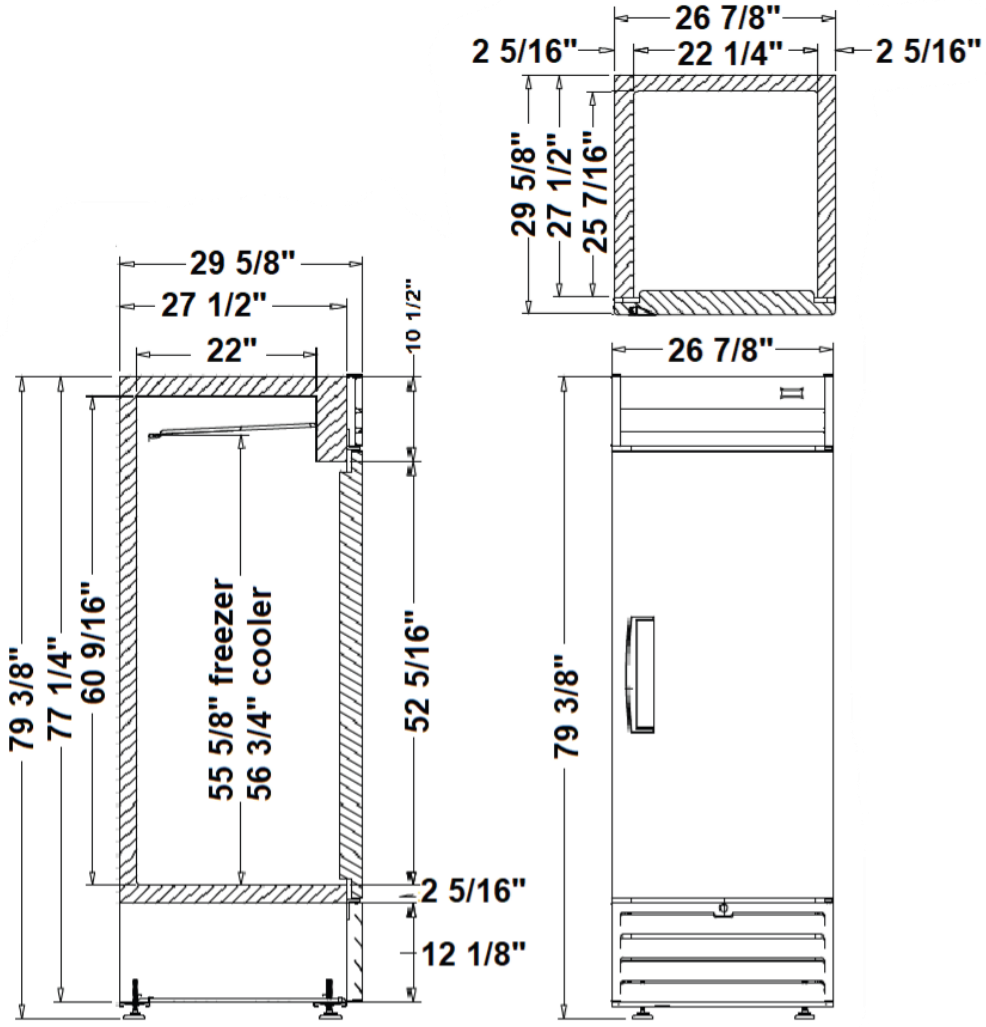

1950 Joe McIntosh Rd
Plant City, FL 33565
800.441.4014 | 813.870.0340
www.excellenceindustries.com

©October 2026 Excellence Industries

CR-43SSHC

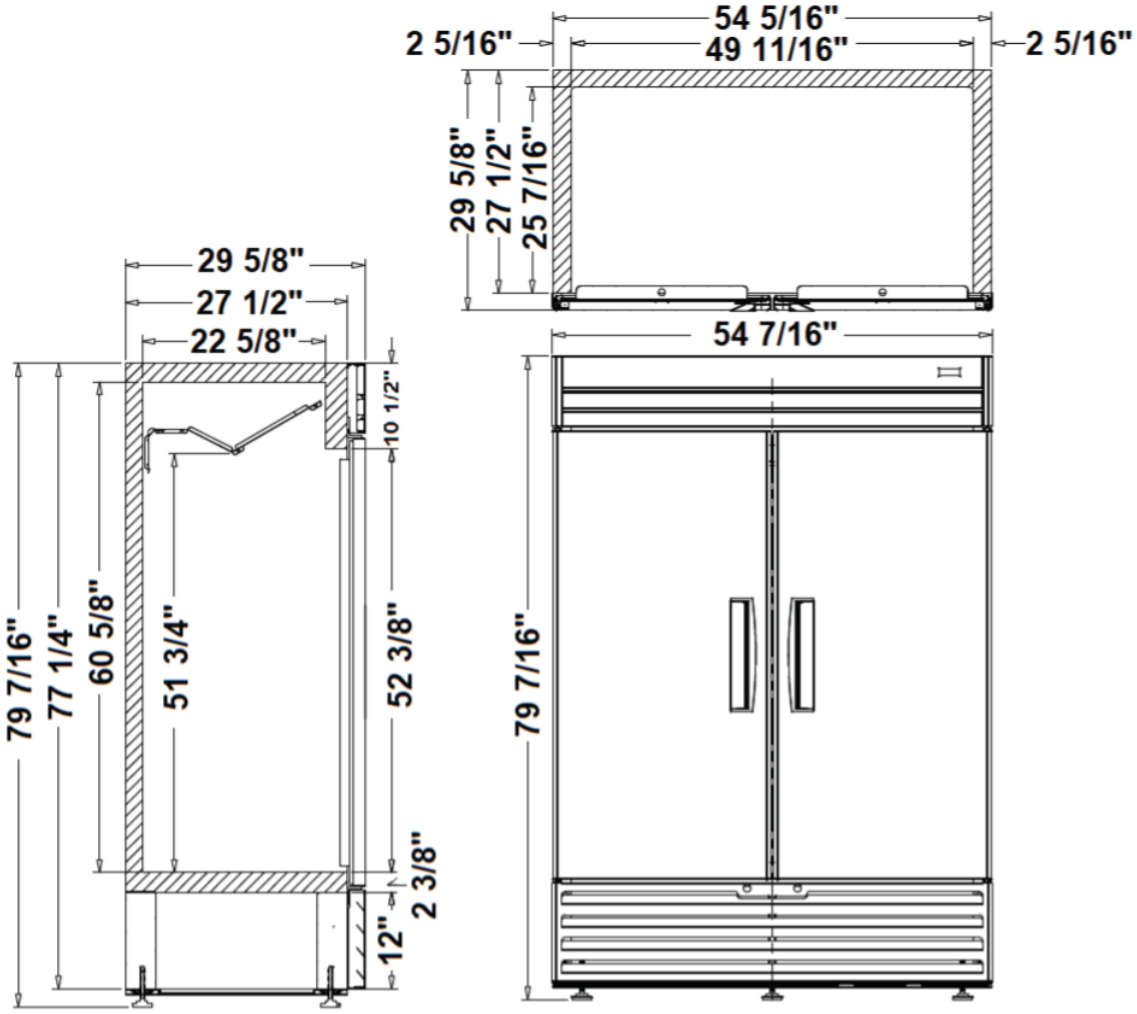

1950 Joe McIntosh Rd
Plant City, FL 33565
800.441.4014 | 813.870.0340
www.excellenceindustries.com

©October 2026 Excellence Industries

CF-20SSHC

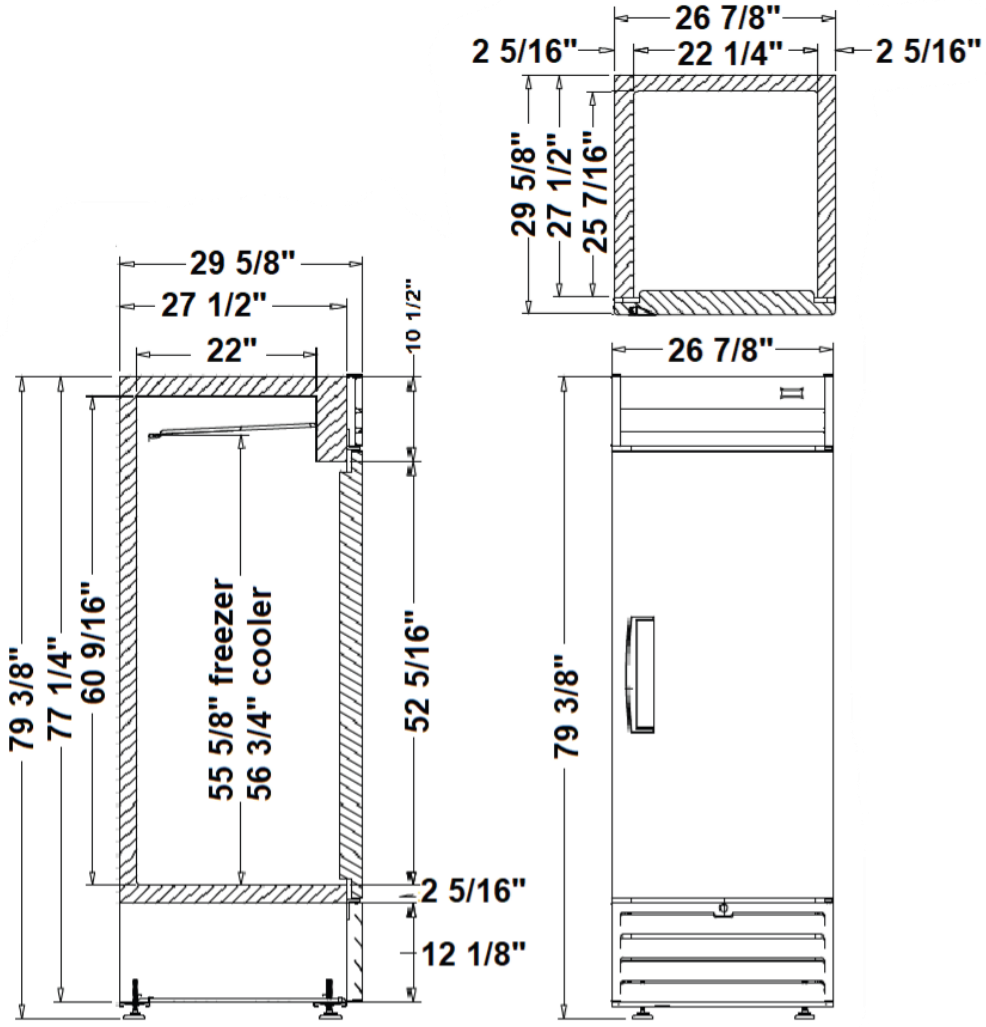

1950 Joe McIntosh Rd
Plant City, FL 33565
800.441.4014 | 813.870.0340
www.excellenceindustries.com

©October 2026 Excellence Industries

CF-43SSHC

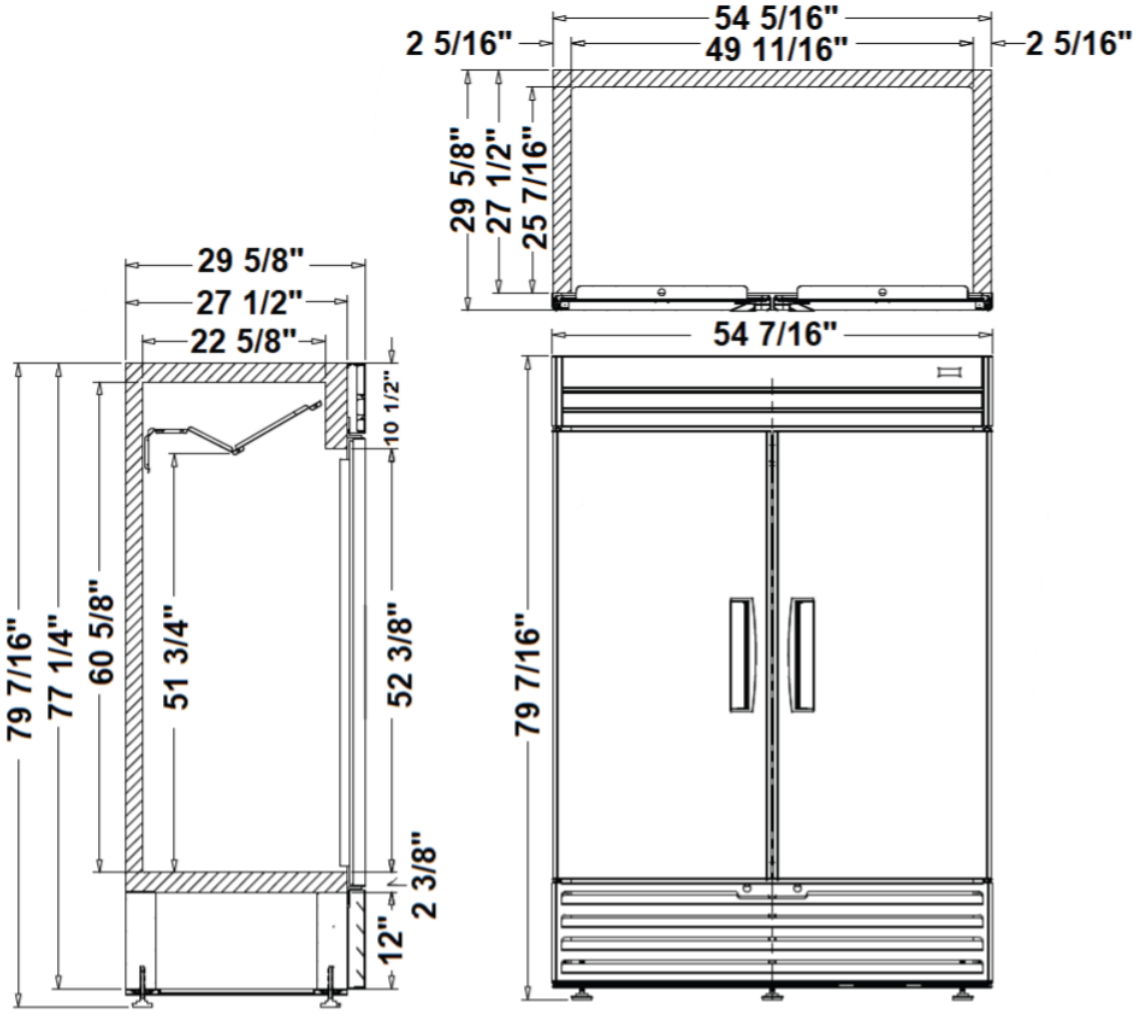

1950 Joe McIntosh Rd
Plant City, FL 33565
800.441.4014 | 813.870.0340
www.excellenceindustries.com

©October 2026 Excellence Industries