INSTRUCTIONS FOR INSTALLATION, USE & GENERAL MAINTENANCE OF YOUR GLASS AND SOLID DOOR COOLERS AND FREEZERS



THIS EQUIPMENT IS INTENDED FOR THE STORAGE AND DISPLAY OF POTENTIALLY HAZARDOUS PACKAGED PRODUCTS

UPDATED DECEMBER 2021

TABLE OF CONTENTS

SAFETY INFORMATION 3

INTRODUCTION 4

CHECK FOR SHIPPING DAMAGE 5

WHERE TO LOCATE THE CABINET 6

REMOVE THE CRATE AND SKID 7

INSTALL LEGS AND CASTERS 7

CONDENSATE DISPOSAL SYSTEM 8

CONNECT THE CABINET TO PROPER ELECTRICAL POWER SUPPLY 8

START UP THE CABINET 9

USE 12

CLEANING AND PREVENTIVE MAINTENANCE 18

TROUBLESHOOTING CHART 19

SAFETY INFORMATION

SAFETY PRECAUTIONS

WHEN USING ELECTRICAL EQUIPMENT, CERTAIN BASIC SAFETY PRECAUTIONS MUST BE OBSERVED, INCLUDING THE FOLLOWING:

- This unit must be installed and located appropriately, following the installation instructions before its use.
- Do not allow children to climb, step or hang onto the shelves inside the cooler. That could damage the unit and cause serious injuries to them.
- Do not place your feet or step on the front grill.
- Do not touch the cold surfaces of the cooler with your hands wet or with moisture. The skin can stick to these cold surfaces.
- Do not store gasoline or other flammable liquids or gases, near this or other electrical equipment.
- Keep your fingers away from grills; the spaces between doors and cabinet are small, so be careful when closing doors when children are around.
- Unplug the cooler before cleaning or performing any repair.

NOTE

Service should be provided by a qualified technician.

INTRODUCTION

This manual contains instructions for installation, operation and general maintenance of your unit. It also includes a Troubleshooting Chart to diagnose problems along with corrective actions.

GENERAL SAFETY

- This appliance employs hydrocarbon R-290 (Propane) in its refrigeration system. As this refrigerant is flammable, maintenance and recharging must therefore only be carried out by authorized technicians.
- Take care when handling your appliance so as not to cause any damages to the cooling unit with consequent possible fluid leakages.
- The appliance must not be located close to stoves, radiators or boilers.
- Avoid prolonged exposure of the appliance to direct sunlight.
- Only genuine spare parts should be used to service this refrigerator.



FEATURES

- Hydrocarbon R-290 refrigerant, which is environmentally friendly and makes these units the greenest coolers in the world.

- Sturdy cabinet with strong structural stability resulting from the most advanced foam-in-place injection system. Polyurethane insulation with cyclopentane as blowing agent which does not harm the ozone layer and does not affect global warming.

- Designed to perform efficiently under high-ambient conditions.

- Fan motors are completely sealed.

- For every single unit manufactured, a computerized quality assurance test is performed on the refrigeration system while the cooler is running, resulting in a trouble free unit.

CHECK FOR SHIPPING DAMAGE

Prior to leaving the factory, each cabinet is throughly inspected and performance tested up to 12 hours to assure proper operating temperatures.

Check the crate thoroughly for signs of shipping damage. If external damage exists, internal damage is also probable. Uncrating should be done while the carrier´s representative is present. Otherwise, the equipment should be uncrated as soon as possible, preferably within five (5) days.

The manufacturer is not responsible for in-transit damage and the consignee must file any required damage claims directly with the carrier.

If the damage is severe and obvious, write a brief description of the evidence on the carrier's delivery receipt, and above the carrier representative's signature. Call the distributor or dealer immediately, indicating that the cabinet was damaged.

If no obvious crate damage is present, within two hours of receiving the cabinet from the carrier, remove the packaging to inspect for concealed damage.

1. If concealed damage is found, call the carrier immediately, **save all crating materials**, and file the necessary freight claim with the carrier.

Check for accesories: Check that the shelves are inside the refrigerator, including the four clips or supports for each shelf.

WHERE TO LOCATE THE CABINET

1. Place the cabinet on a surface solid enough to prevent vibration and strong enough to support the combined weight of the cabinet and the product load. Quick guideline: Estimate 35 pounds per cubic foot of storage space.

2. Cabinets should never be placed in front of windows or glass doors where sunlight will be in direct contact with the units. If a cabinet is located near a window or glass door, provide an adequate shade to block the sun´s rays.

3. Ambient temperature must be between 59°F and 86°F. Low ambient temperatures below 50° F are as harmful as high ambient temperatures. Extreme temperatures will definitely affect the performance of the cabinet.

4. Failure to properly level the cabinet could hinder proper drainage and door operation. If the floor is extremely uneven, shim the corners with thin sheets of metal (may also be used when optional casters have been included). Leveling legs are provided with the cabinets. Level the cabinet by using the adjustable portion of the leveling legs as needed. On page # 8 you will find instructions on how to install the leveling legs.

5. Clearance: Leave a space of at least 8” between the back of the cabinet and the wall to provide adequate air circulation of the unit compartment.

6. The cabinet base of this unit must be sealed to the floor with silicone.



REMOVE THE CRATE AND SKID

1. Remove the external packaging (corrugated board and plastic wrappings). Check for concealed damage. If any damage is identified, immediately forward a complaint to the transportation company.

2. Move the cooler the closest possible to its final location, before removing the skid.

3. Using a screwdriver remove the screws that fix the skid to the cooler, or metal supports if applicable.

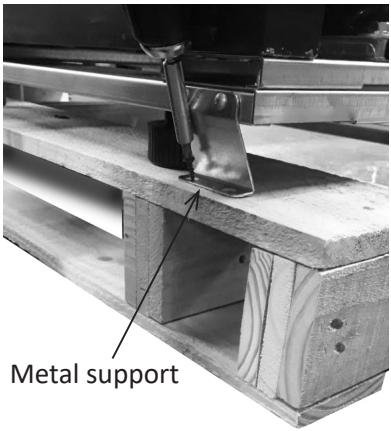

INSTALL LEGS AND CASTERS

To install the legs:

Heavy duty leveling legs are provided with some models so the cabinet may be leveled accurately and to allow room to clean beneath the cabinet.
Tilt the cabinet back just far enough to fit the front legs and place a block of wood or some similar support under it until both front legs are in. Then tilt the cabinet forward enough to install the rear legs.

After the legs are intalled, level the cabinet by using the adjustable portion of the legs as needed. This is very important to insure proper draining and door operation.

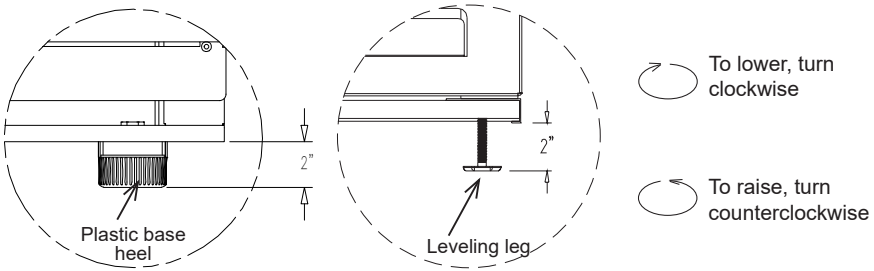

To install casters:
Casters are supplied as optional equipment. To install the casters, follow the directions for installing legs.

CONDENSATE DISPOSAL SYSTEM

All units come equipped with non-electric evaporator pans located in the bottom of the cabinet in the condensing unit compartment. No additional plumbing installation is required.

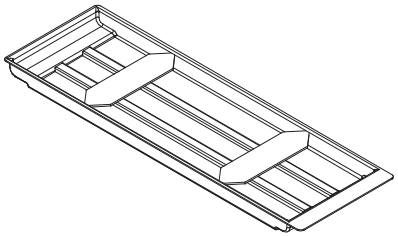

Evaporator pan for freezers

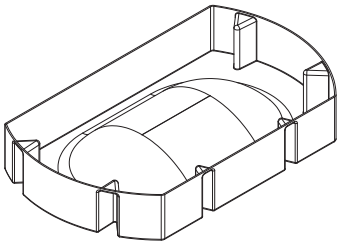

Evaporator pan for refrigerators

CONNECT THE CABINET TO PROPER ELECTRICAL POWER SUPPLY

Each unit requires a dedicated circuit to prevent malfunction of the compressor and the electrical components. Each unit should be connected to its own circuit in accordance with National Electric Codes and local ordinances.

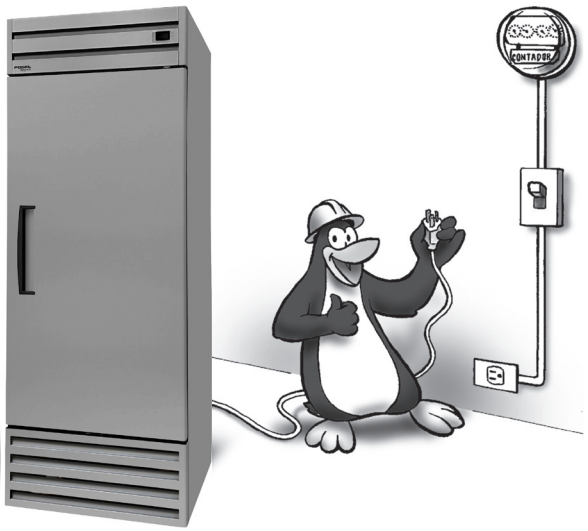

START UP THE CABINET

1. Shelves and shelf clips (4 clips per shelf) are packed inside the cabinet prior to shipment. After selecting the appropriate spacing inside the cabinet, install shelf clips by inserting top of clip inside the pilaster and then press the lower section of the clip while pushing inwards until it snaps into place. Repeat until all clips are in desired location. Place shelf on clips checking that all four corners of shelves are leveled and supported by the four shelf clips.

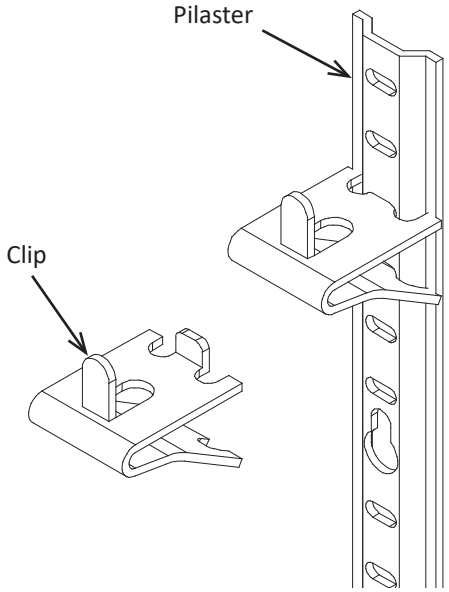

2. Plug in electrical power cord. Do not under any circumstance cut or remove the earthing pin from the power cord. Removal of earthing pin invalidates product warranty.

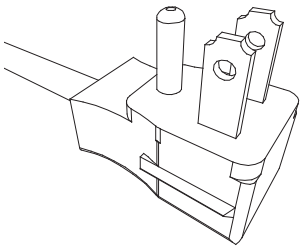

INSTALLATION

FRONT GRILLS

To remove the front grill follow these instructions:

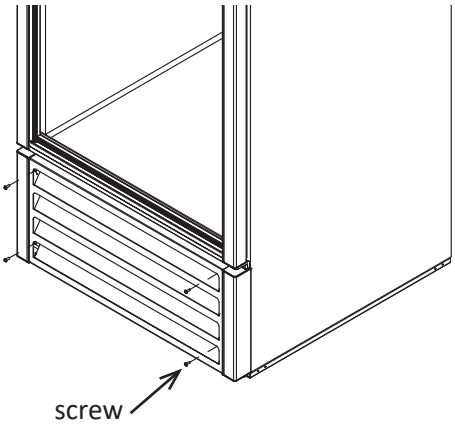

1. Remove the four screws from the front grill, using the Phillips screwdriver.

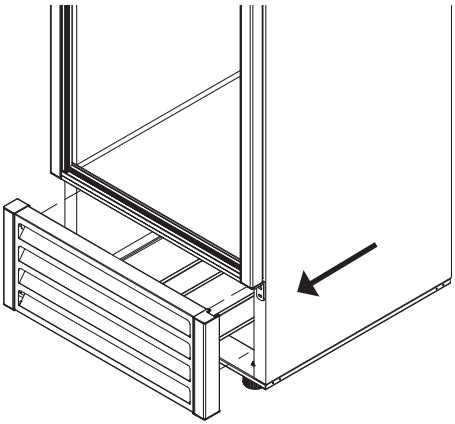

2. The front grill can now be removed by pulling it out.

PRESSURE RELIEF VALVE INSTALLATION

1. Locate the pressure relief valve inside your equipment.

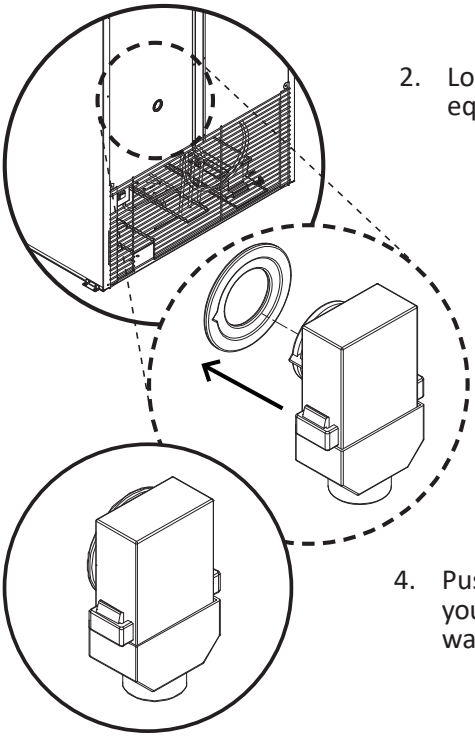

2. Locate the hole in the back of your equipment.

3. Align the pressure relief valve with the hole, using the marking as a guide.

4. Push the pressure relief valve until you hear a click. This means the valve was correctly fixed into place.

USE

CONNECTION OF YOUR COOLER OR FREEZER TO THE ELECTRICAL SUPPLY

1. Plug in the electrical cord of the unit to a wall outlet, following the recommendations about electrical installation in this manual.

2. Let the cooler or freezer run with no product load for 2 hours, or let the compressor complete three on/off cycles to assure that the temperature inside is appropriate for the products, before loading them into the refrigerator.

The temperature of a cooler should be between 36°F to 41°F (2°C and 5°C)
The temperature of a freezer should be between 14°F to -10°F (-10 and -23°C)

USE OF YOUR COOLER WITH CAREL ELECTRONIC THERMOSTAT

FOGEL coolers are provided with a versatile electronic thermostat that allows to cool different beverages, with temperatures down to 40°F (4°C), depending on the model.



To turn off the lights of the cooler press the light bulb symbol.

This unit has a controller to reduce energy consumption. When it detects that the door has not been opened for more than 3 hours, the lights will go off (if applicable) and the cooler will go automatically into “energy saving mode” by slightly increasing its inner operating temperature. In this manner, while your business is closed, you will save approximately up to 40 % in energy consumption.

*MANUAL ACTIVATION OF THE ENERGY SAVING MODE

When closing our business, press gently the “ES” button for 5 seconds until the word ECO is displayed, which confirms that the energy saving mode has been activated.

Once activated, the lights will go off (if applicable) and the word ECO will remain on the display.

***NOTE:**

These functions can be modified or eliminated according to the requirements to factory.

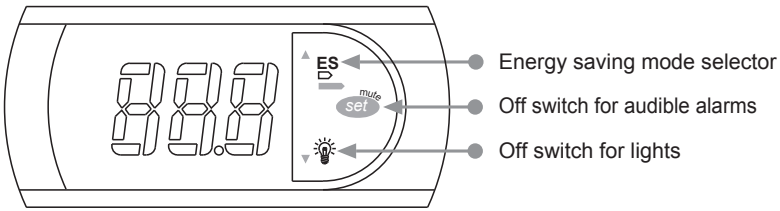

IN ORDER TO LEAVE THE ENERGY SAVING MODE, YOU ONLY NEED TO OPEN THE COOLER DOOR OR GENTLY PRESS THE “ES” BUTTON FOR 5 SECONDS.

AFTER OPERATING FOR 8 HOURS IN THE ENERGY SAVING MODE, THIS DEVICE WILL RETURN TO THE STANDARD OPERATING TEMPERATURE.

TEMPERATURE SELECTION

TEMPERATURE RANGE	TEMPERATURE MODE
+ 40°F to +48°F (+4°C to +8°C)	STANDARD TEMPERATURE MODE
+36.5°F to +44.5°F (+2.5°C to +6.5°C)	STANDARD TEMPERATURE MODE
+32°F to 40°F (0°C to +4°C)	STANDARD TEMPERATURE MODE

* **NOTE:** THE TEMPERATURE RANGES CAN VARY ACCORDING TO THE PROGRAMMING REQUIREMENTS TO FACTORY.

IF THE COOLER IS UNPLUGGED FROM THE POWER, THESE SAVINGS ARE LOST

CAREL ALARM INDICATORS

CONTROLLER DISPLAY

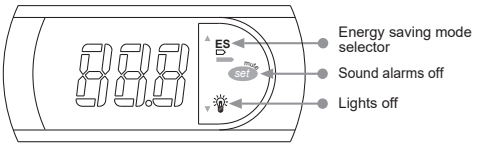

If the display shows a number, the cooler is working in optimal conditions and no technical service is needed.

ALARM	INDICATES	WHAT TO DO?
E0	Ambient sensor failure	Report to service center
E3	Refrigeration system failure	Report to service center
dOr	Open door	Close door
LO	Low temperature alarm	Report to service center
HI	High temperature alarm	Report to service center

Note: The sound alarm can be turned off by pressing the red button "*set mute*" on the right side of the display.

In case the alarm is not turned off by the actions suggested, or you have any questions regarding the cooler performance, please contact the information and service center.

USE OF YOUR COOLER OR FREEZER WITH DIXELL ELECTRONIC THERMOSTAT

Your commercial Refrigerator or Freezer is manufactured with an electronic thermostat to control various functions of your unit, such as temperature, defrost cycles, alarms, etc.

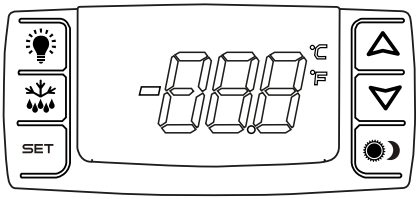

READING THE LEDS:

Each LED function is described in the following table:

LED	MODE	FUNCTION
	ON	Compressor enabled
	Flashing	Anti-short cycle delay enabled
	ON	Defrost enabled
	Flashing	* Drip time in progress
	ON	* Fans enabled
	Flashing	* Fans delay after defrost in progress
	ON	* An alarm is occurring

*** Freezers only**

TEMPERATURE SELECTION*

	TEMPERATURE	ITEM
REFRIGERATOR	+32°F to +39°F (0°C to +4°C)	DIXELL XR07CH
FREEZER	-5°F to +5°F (-20.5°C to -15°C)	DIXELL XR60CX

These temperatures may vary according to customer request.

HOW TO SEE THE SET POINT

1. The set point parameter is the temperature at which the compressor cuts out.

2. Push and immediately release the SET key: the display will show the set point value;

3. Push and immediately release the SET key or wait for 5 seconds to display the probe value again.

HOW TO CHANGE THE SET POINT

1. Push the SET key for more than 5 seconds to change the SET point value;

2. The value of the set point will be displayed and the “C” or “F” LED starts blinking;

3. To change the Set value push the ▲ or ▼ arrows within 10 s.

4. To memorize the new set point value push the SET key again or wait 10 s.

DIXELL ALARM INDICATORS

MESSAGE	CAUSE
P1	Room probe failure
P2	Evaporator probe failure
HA	Maximum temperature alarm
LA	Minimum temperature alarm
EA	Door alarm

CONTROLS AND ADJUSTMENTS

The temperature of a cooler should be between 38.4°F to 38.7°F
The position of the control knob should be set around 4-7 to achieve this temperature.

NOTES:

- THE DEFAULT SET POINT IS 38.5°F
- THE SET POINT RANGE IS FROM 37.8°F TO 39.2°F

DEFROST CYCLES

The electronic controller is programmed to perform evaporator defrost cycles every six hours with a duration of 25 minutes. These defrosts ensure that the evaporator remains free of ice build up, optimizing the performance of the cooler.

TEMPERATURE DIAL "OFF" POSITION

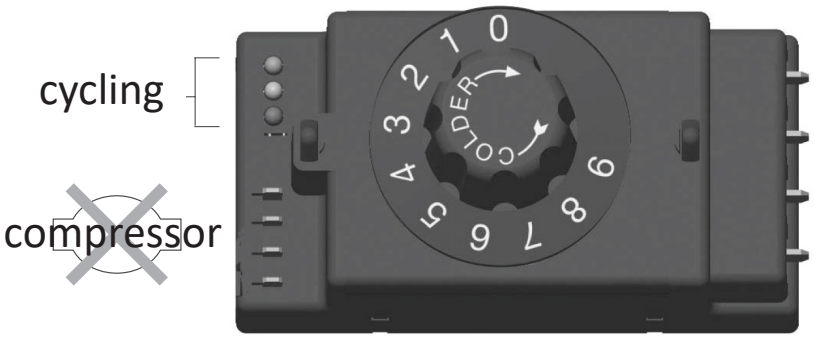

The control knob can be set to the 'Off' position by turning it fully counterclockwise. This setting turns off the compressor and the fans regardless of temperature, allowing manual defrost, cleaning etc.

ATTENTION

This controller has a feature to protect the cooler against an electrical spike/surge. After an interruption of the power supply, the controller will delay the start of the compressor for approximately 3 minutes.

General recommendations

1. Verify the internal illumination operation by activating the on and off switch.
2. Do not leave the door open for extended periods of time to avoid raising the temperature inside the cabinet.
3. When placing products in the cooler, you should leave small gaps between one and the other to assure the free circulation of air through all the inside of the cabinet.
4. Do not unplug your cooler during the night, since when you turn it back on during the day the electrical consumption will increase.

ATTENTION

All coolers have a protection system that prevents compressor operation when the input voltage is either too low or too high.

After an interruption of the electrical power supply, the compressor will take approximately 3 minutes to start working after the voltage is back to normal.

CLEANING AND PREVENTIVE MAINTENANCE

Your unit requires very little maintenance. However, periodic cleaning can help prolong product life. Remember to disconnect the power source before cleaning. Remove all products and place them in another cooler.

1. Clean the inside and the exterior of your cooler, including the shelves, with a mild soap solution. Do not use strong detergents. Wipe dry the inside of the cooler before loading product again.

2. Plug in your unit and wait for 2 hours for the temperature to be appropriate to load your product back.

TROUBLESHOOTING CHART

Compressor will not start, no noise	1. Power disconnected	1. Check service cord for proper connection
	2. Blown fuse or breaker	2. Replace fuse or reset breaker
	3. Defective or broken wiring	3. Repair or replace
	4. Defective overload	4. Replace
	5. Defective relay	5. Replace
	6. Thermostat on off position	6. Turn dial of thermostat to on position
Warm storage temperatures	1. Temperature control not set properly	1.Reset control
	2. Not enough refrigerant	2. Leak check. Change drier, evacuate and recharge
	3. Cabinet location too warm	3. Relocate cabinet
	4. Too much refrigerant	4. Change drier, evacuate and recharge
	5. Low voltage, compressor cycling on overload	5. Check voltage supply
Compressor runs continuously-product too cold	1. Defective control	1. Replace
	2. Control feeler tube not installed in well	2. Push control feeler tube into well
	3. Not enough refrigerant	3. Leak check. Change drier, evacuate and recharge
Compressor runs continuously-product too warm	1. Not enough refrigerant	1. Leak check. Change drier, evacuate and recharge
	2. Inefficient compressor	2. Replace

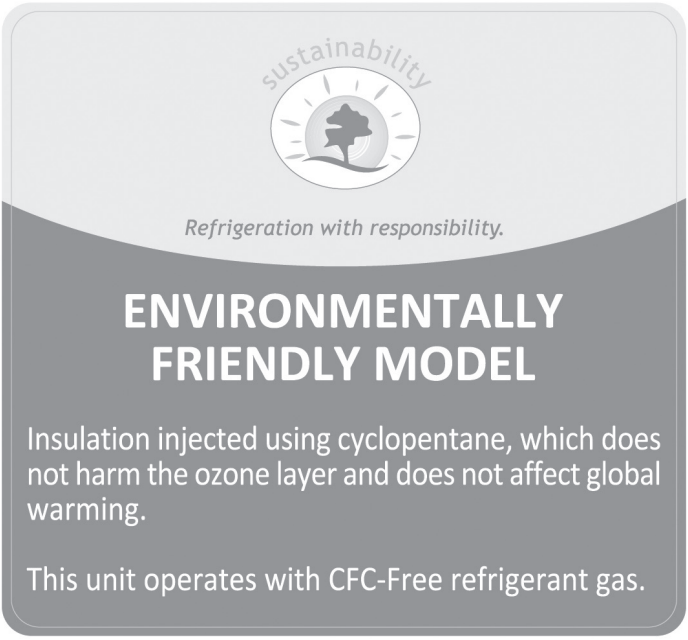

Excellence Industries

500 S Falkenburg Road | Suite 200 |
Tampa, FL 33619
ph: 813.870.0340 x121 | fax: 813.877.5832