CR-20HC

EXPLODED VIEW AND PARTS INDEX

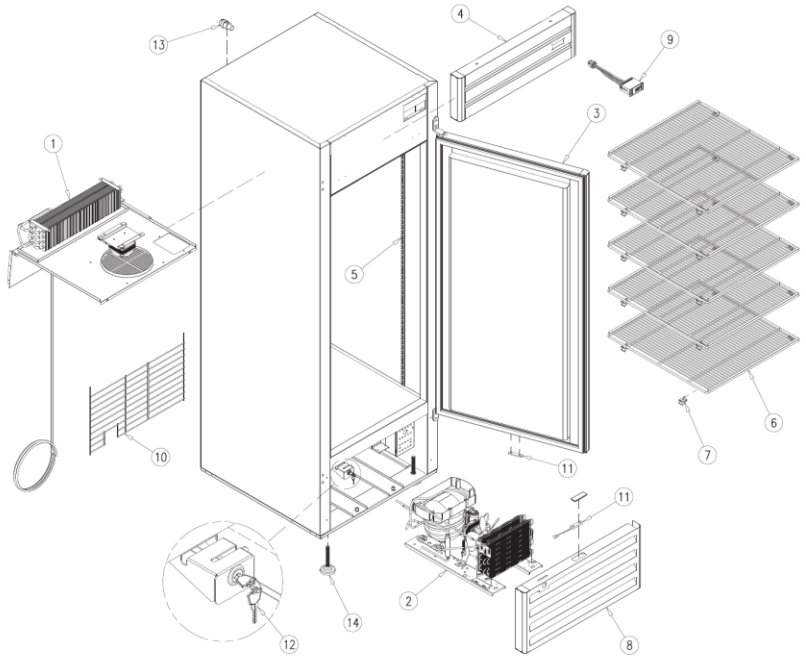

Item	Parts name in EN	Code	Qty
1	EVAPORATOR ASSEMBLY	OT-EV-0200	1
2	CONDENSING UNIT ASSEMBLY	OT-UN-0081	1
3	DOOR ASSEMBLY	OT-PTA-0310	1
4	HEADER SIGN ASSEMBLY	OT-ROTULO-0329	1
5	48” PILASTER	PI-5	4
6	FLAT SHELF	SH-0427-HD-FE-GR	5
7	SHELF CLIPS	CL-51-SS-E	20
8	FRONT GRILL ASSEMBLY	OT-CUBREMOTOR-0427	1
9	ELECTRONIC THERMOSTAT XR4OCX	CT-67-DI	1
10	BACK GRILL	SH-0428-G-B	1
11	MAGNETIC SWITCH	EL-306	1
12	KEY SET	HA-471-G	1
13	DECOMPRESSION VALVE	VA-103	1
14	LEVELING LEGS	LG-31	4

1950 Joe McIntosh Rd
Plant City, FL 33565
800.441.4014 | 813.870.0340
www.excellenceindustries.com

©October 2026 Excellence Industries

CR-43HC

EXPLODED VIEW AND PARTS INDEX

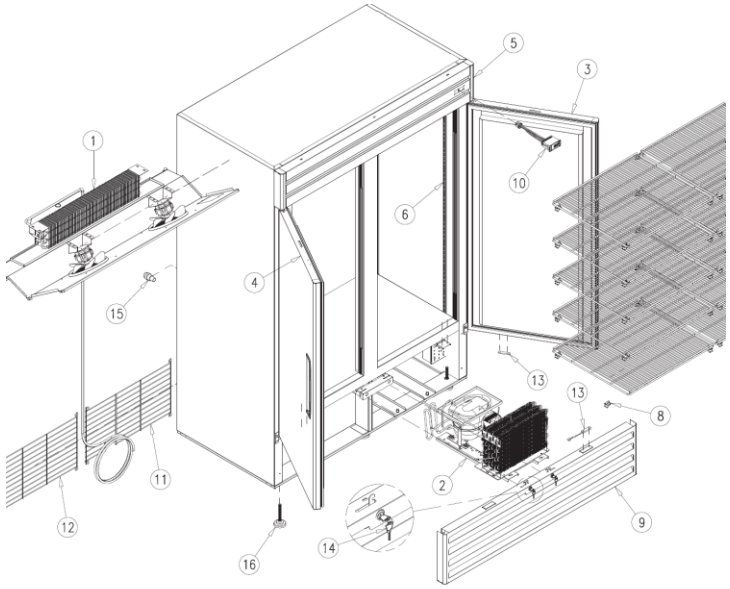

Item	Parts name in EN	Code	Qty
1	EVAPORATOR ASSEMBLY	OT-EV-0194	1
2	CONDENSING UNIT ASSEMBLY	OT-UN-0090	1
3	RIGHT DOOR ASSEMBLY	OT-PTA-0249-R	1
4	LEFT DOOR ASSEMBLY	OT-PTA-0249-L	1
5	HEADER SIGN ASSEMBLY	OT-ROTULO-0327	1
6	48” PILASTER	PI-5	8
7	FLAT SHELF	SH-0445-HD-FE-GR	10
8	SHELF CLIPS	CL-51-SS-E	40
9	FRONT GRILL ASSEMBLY	OT-CUBREMOTOR-0295	1
10	ELECTRONIC THERMOSTAT XR4OCX	CT-67-DI	1
11	RIGHT BACK GRILL	SH-0443-G-B	1
12	LEFT BACK GRILL	SH-0444-G-B	1
13	MAGNETIC SWITCH	EL-306	2
14	KEY SET	HA-471-G	2
15	DECOMPRESSION VALVE	VA-103	2
16	LEVELING LEGS	LG-31	6

1950 Joe McIntosh Rd
Plant City, FL 33565
800.441.4014 | 813.870.0340
www.excellenceindustries.com

©October 2026 Excellence Industries

CF-20HC

EXPLODED VIEW AND PARTS INDEX

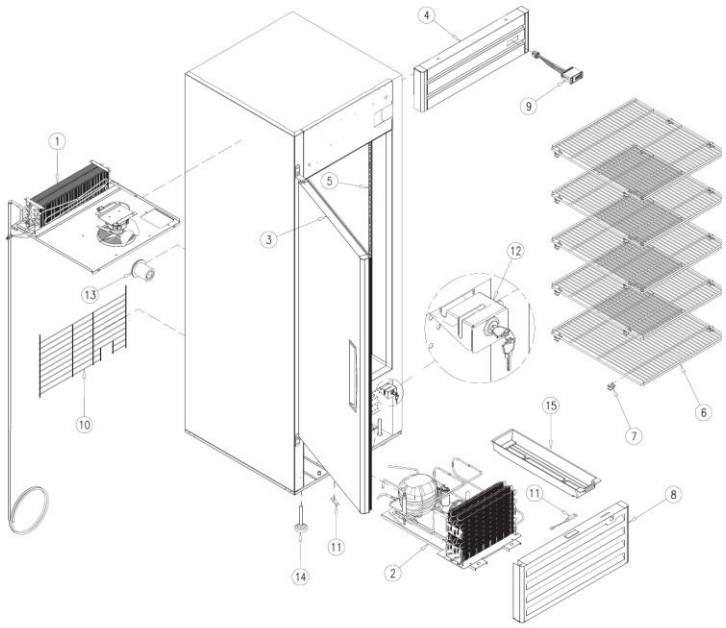

Item	Parts name in EN	Code	Qty
1	EVAPORATOR ASSEMBLY	OT-EV-0214	1
2	CONDENSING UNIT ASSEMBLY	OT-UN-0082	1
3	DOOR ASSEMBLY	OT-PTA-0311	1
4	HEADER SIGN ASSEMBLY	OT-ROTULO-0330	1
5	48” PILASTER	PI-5	4
6	FLAT SHELF	SH-0427-HD-GR	5
7	SHELF CLIPS	CL-51-SS-E	20
8	FRONT GRILL ASSEMBLY	OT-CUBREMOTOR-0429	1
9	ELECTRONIC THERMOSTAT XR6OCX	CT-68-DI	1
10	BACK GRILL	SH-0428-G-B	1
11	MAGNETIC SWITCH	EL-306	1
12	KEY SET	HA-471-G	1
13	DECOMPRESSION VALVE	VA-107-V12	1
14	LEVELING LEGS	LG-31	4
15	WATER PAN	OT-TF-1191	1

1950 Joe McIntosh Rd
Plant City, FL 33565
800.441.4014 | 813.870.0340
www.excellenceindustries.com

©October 2026 Excellence Industries

CF-43HC

EXPLODED VIEW AND PARTS INDEX

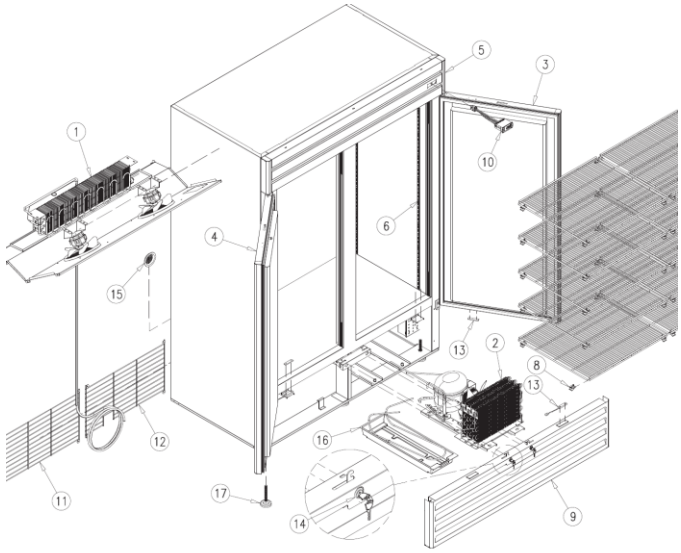

Item	Parts name in EN	Code	Qty
1	EVAPORATOR ASSEMBLY	OT-EV-0215	1
2	CONDENSING UNIT ASSEMBLY	OT-UN-0091	1
3	RIGHT DOOR ASSEMBLY	OT-PTA-0249-R	1
4	LEFT DOOR ASSEMBLY	OT-PTA-0249-L	1
5	HEADER SIGN ASSEMBLY	OT-ROTULO-0327	1
6	48” PILASTER	PI-5	8
7	FLAT SHELF	SH-0445-HD-GR	10
8	SHELF CLIPS	CL-51-SS-E	40
9	FRONT GRILL ASSEMBLY	OT-CUBREMOTOR-0295	1
10	ELECTRONIC THERMOSTAT XR6OCX	CT-68-DI	1
11	RIGHT BACK GRILL	SH-0443-G-B	1
12	LEFT BACK GRILL	SH-0444-G-B	1
13	MAGNETIC SWITCH	EL-306	2
14	KEY SET	HA-471-G	2
15	DECOMPRESSION VALVE	VA-107-V12	1
16	WATER PAN	OT-TF-0383	1
17	LEVELING LEGS	LG-31	6

1950 Joe McIntosh Rd
Plant City, FL 33565
800.441.4014 | 813.870.0340
www.excellenceindustries.com

©October 2026 Excellence Industries