Excellence Industries

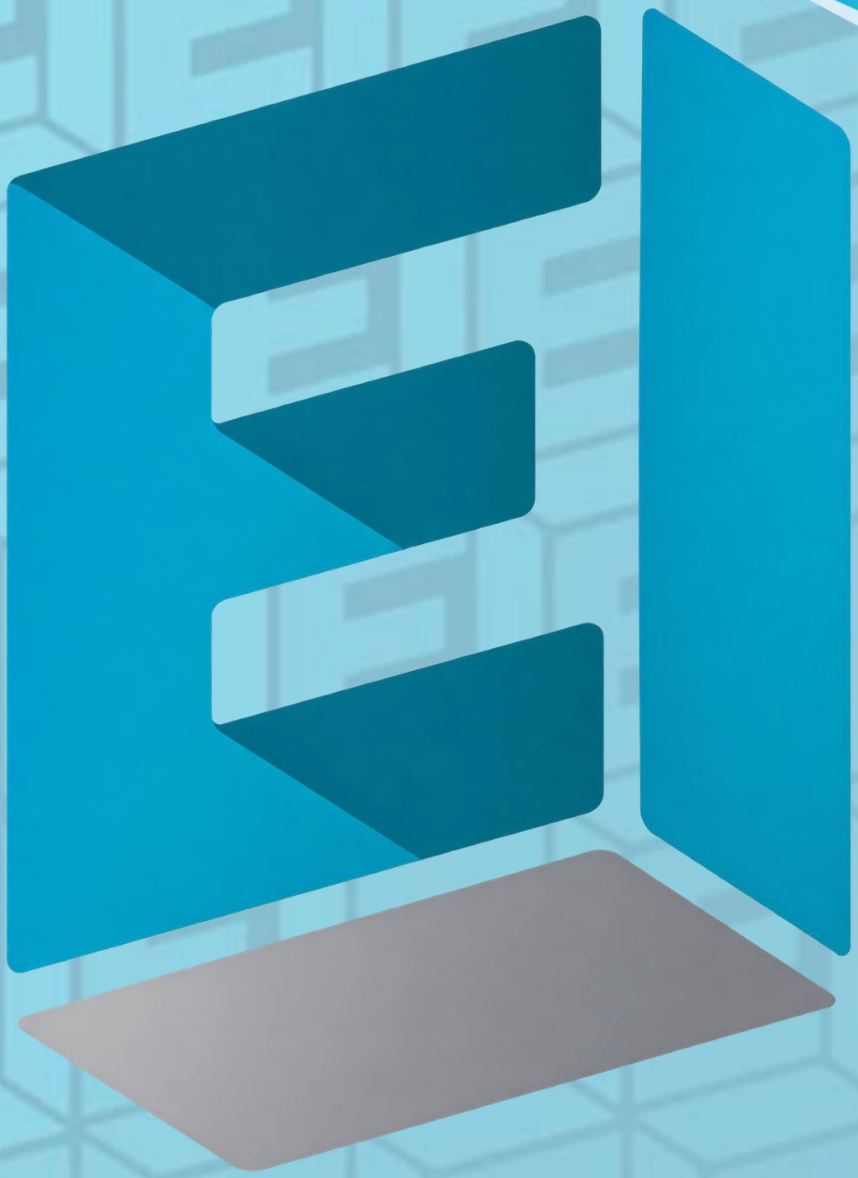

INNOVATION
LOGISTICS
DISTRIBUTION
LEASING
SERVICE
REFURBISHING
RECYCLING

The Most Exceptional Commercial Refrigeration Solutions

70 Years of Excellence and Experience



Global Headquarters
1950 Joe McIntosh Rd, Plant City, FL 33565



Distribution Facility
4955 Joule St, Reno, NV 89502

Index

Horizontal Merchandiser 6
DD 8
EDC 10
EURO 12
HB 14
HBD 16
HBG 18
HL 20
HM 22
HR 24
MB 26
MC 28
MCT 30
RF 32
SM 34
SPOT 36
VB 38
VBN 40
Vertical Merchandiser 42
GDF 44
GDR 46
GDR-10SL 48
GDR-13SL 50
GDR-14P 52
NG 54
OMNIVIEW 56
PANORAMIC 58
SLF 60
TKO 62
TKOF 64
VF 66
VR 68
Open Air Display 70
AC 72
ACS 74
IDA 76
KAC 78
KOF 80
TDAL 82
Countertop Merchandiser 84
CTF 86
CTFMS 88
CTF-T 90
CTM 92
CVL 94
EMM-HC 96
MINI 98
Storage 100
BD 102
BD JUMBO 104
CR/CF 106
CR/CF-SS 108
DSS-C 110
DSS-CG 112
DSS-F 114
FT 116
HFF 118
ISL 120
MCSC 122
Ultra Cold 124
LAB 126
UCS 128
VAC 130

The Cycle of Excellence



Everything Excellence Industries does is focused on one goal: **helping our partners grow their business.**

We offer an extensive range of commercial coolers and freezers designed for both display and storage. With decades of experience, Excellence Industries has a proven track record of developing innovative, customized refrigeration solutions for the food, beverage, foodservice, and retail industries.

From standard equipment to fully customized programs, we work closely with our customers to develop solutions that enhance product visibility, strengthen brand presence, improve merchandising, and drive sales.

Today, Excellence Industries is a trusted commercial refrigeration partner to some of the world's largest food, beverage, and retail brands.

Power of Partnership

Your experience is seamless and efficient, beginning with innovative custom designs and graphics. Excellence Industries offers logistics and distribution, leasing, service, and recycling–all from one reliable resource.



Our global manufacturing network spans four continents, with production capabilities exceeding one million units annually. This scale, combined with decades of experience developing customized refrigeration programs, enables Excellence to provide a superior outsourced solution for virtually every refrigeration need.

From concept and product development to manufacturing and implementation, Excellence Industries delivers the expertise, flexibility, scale, and support required by some of the world's leading brands.

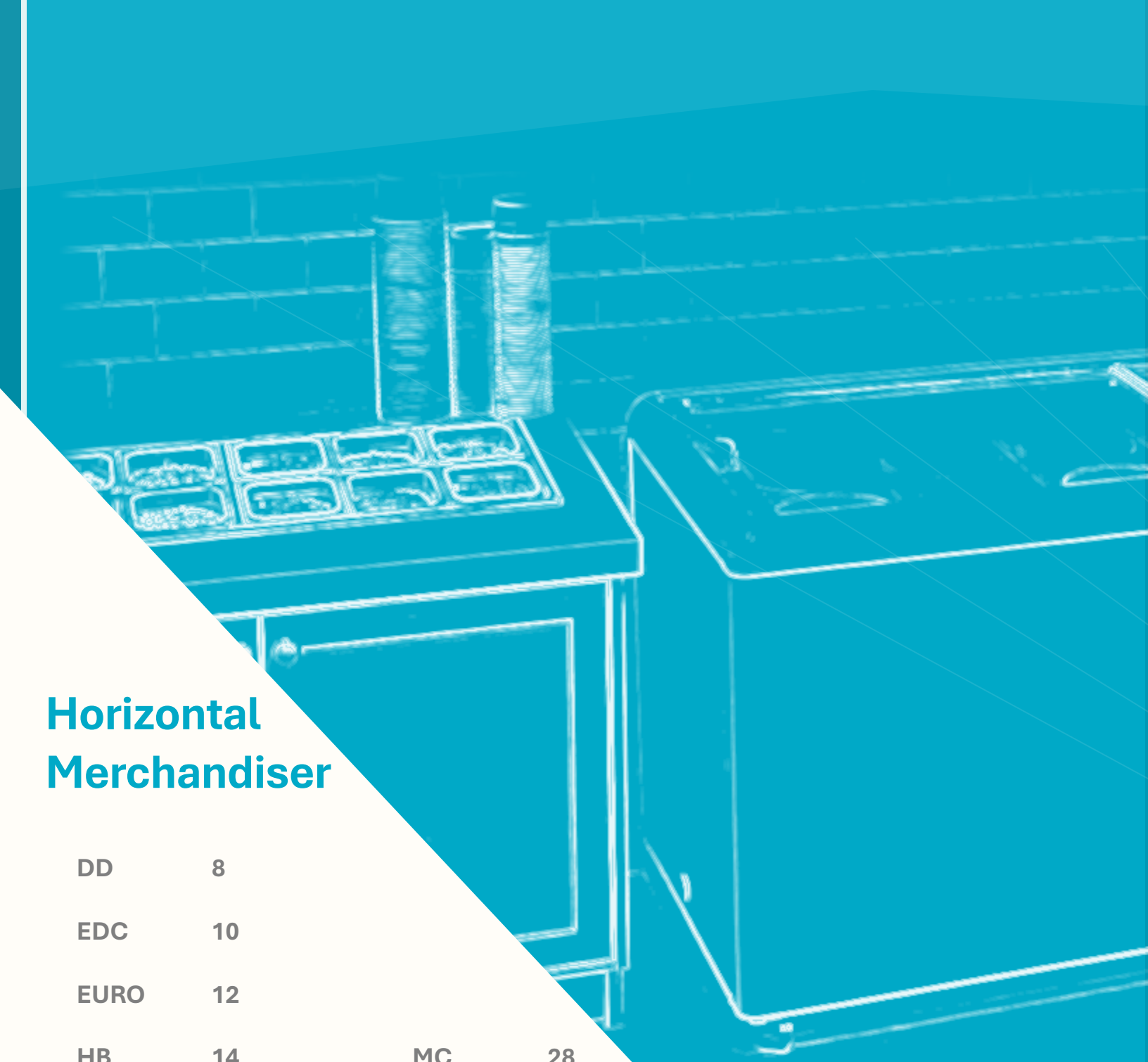

Horizontal Merchandiser

DD	8		
EDC	10		
EURO	12		
HB	14	MC	28
HBD	16	MCT	30
HBG	18	RF	32
HL	20	SM	34
HM	22	SPOT	36
HR	24	VB	38
MB	26	VBN	40



Excellence Industries

Profit from the Power of Partnership.



DD

DELUXE DIPPING CABINET

KEY FEATURES

- Sliding glass service doors
- Storage door in back
- Illuminated front panel
- Gelato racks or three-gallon tub racks included
- Internal LED and casters standard
- 12.75-foot cord / 9.75-foot accessible cord
- Environmentally friendly R-290 refrigerant
- Temperature range of -15°F to +15°F

ADVANTAGES

- Curved glass front improves product visibility at the counter
- Four widths cover 4 to 10 displayed three-gallon tubs
- Back storage door supports faster restocking during service
- Integrated lighting helps merchandize product at the counter
- Freestanding cabinet with casters simplifies placement



DD-8

DOE LISTED

Complies with 2017 DOE standards for commercial ice cream freezer

1950 Joe McIntosh Rd
Plant City, FL 33565
800.441.4014 | 813.870.0340
www.excellenceindustries.com



DD

DELUXE DIPPING CABINET

SPECIFICATIONS

Model	DD-4	DD-6	DD-8	DD-10
Cubic Feet	6.0	8.5	10.9	15.2
Approx. Weight (Net)	181 lb (82 kg)	240 lb (109 kg)	271 lb (123 kg)	335 lb (152 kg)
Approx. Weight (Shipping)	238 lb (108 kg)	304 lb (138 kg)	357 lb (162 kg)	439 lb (199 kg)
Running Amps	1.3	1.4	2	4.1
Compressor HP	1/7	1/5	1/4	1/2
3-Gal. Tubs Displayed/ Storage	4 / 2	6 / 4	8 / 6	10 / 10
5-Liter Pans Displayed/ Storage	4 / 6	6 / 10	9 / 14	12 / 20
Container Quantity	47	39	31	23

NEMA 5-15P



115 / 60 / 1

AVAILABLE OPTIONS

- Illuminated front graphics
- Custom color plastic (container orders only)
- Dipper well

PRODUCT INFORMATION

Click or scan QR to access spec sheets and technical information

DD SERIES

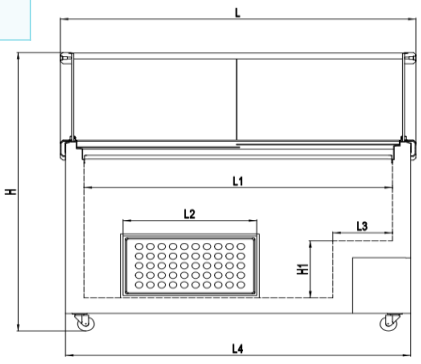

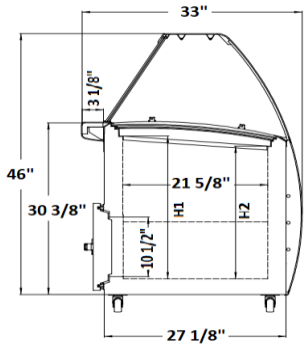

Model	L	L1	L2	L3	L4	H	H1	H2
DD-4	32 7/8"	25 7/8"	12 5/8"	8 1/2"	31 3/8"	49"	9 7/8"	23 5/8"
DD-6	42 1/2"	35 3/8"	20"	8 1/2"	41"	50"	9 7/8"	23 5/8"
DD-8	53 1/8"	46"	20"	8 7/8"	51 5/8"	50"	10"	25 1/8"
DD-10	67 5/8"	60 5/8"	20"	8 1/2"	66 1/8"	50"	9 7/8"	23 5/8"

NOTE: Dimensions are in inches.
NOTE: Dimensions are all nominal lengths, use final spec sheet for exact data and model availability.
NOTE: Shipping weight does not include weight of pallets when needed.
NOTE: These merchandisers are designed for use in stores where temperature and humidity do not exceed listed operating conditions.
NOTE: We reserve the right to change specifications and product design without notice

Excellence Industries

Profit from the Power of Partnership.



EDC

DIPPING CABINET

KEY FEATURES

- Sneeze shield
- Single-layer heat reflective glass lids
- Dual condensing system
- Frameless lids
- Available in curved or straight front glass
- 6-foot cord
- Environmentally friendly R-290 refrigerant
- Temperature range of -15°F to +5°F

ADVANTAGES

- Designed for dipping cabinet applications
- Four-model lineup covers 4 or 8 displayed three-gallon tubs
- Can holders with spill guard support clean counter use
- Sneeze shield and frameless lids improve dipping-service access



EDC-8CHC

DOE LISTED

Complies with 2017 DOE standards
for commercial freezer and ice cream freezer

1950 Joe McIntosh Rd
Plant City, FL 33565
800.441.4014 | 813.870.0340
www.excellenceindustries.com



EDC

DIPPING CABINET

SPECIFICATIONS

Model	EDC-4HC	EDC-4CHC	EDC-8HC	EDC-8CHC
Cubic Feet	5.0	5.0	12.5	12.5
Approx. Weight (Net)	178 lb (81 kg)	177 lb (80 kg)	272 lb (123 kg)	277 lb (126 kg)
Approx. Weight (Shipping)	188 lb (85 kg)	187 lb (85 kg)	283 lb (128 kg)	288 lb (131 kg)
Running Amps	3.2	3.2	4.3	4.3
Compressor HP	1/5	1/5	1/4	1/4
3-Gal. Tubs Displayed	4	4	8	8
Container Quantity	140	110	72	60

NEMA 5-15P



115 / 60 / 1

AVAILABLE OPTIONS

- Graphics
- Dipper well
- Night covers
- Locking device

PRODUCT INFORMATION

Click or scan QR to access spec sheets and technical information

EDC-4HC / EDC-8HC

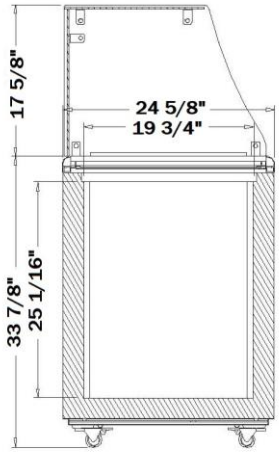

EDC-4CHC / EDC-8CHC

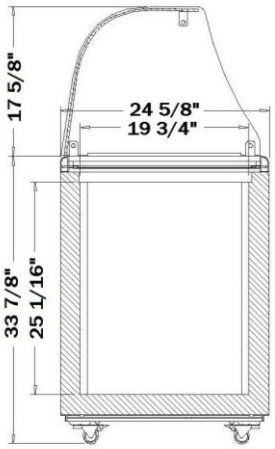

EDC-8HC / EDC-8CHC

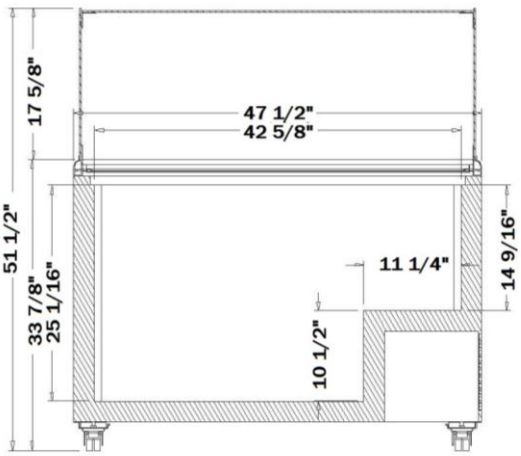

EDC-4HC / EDC-4CHC

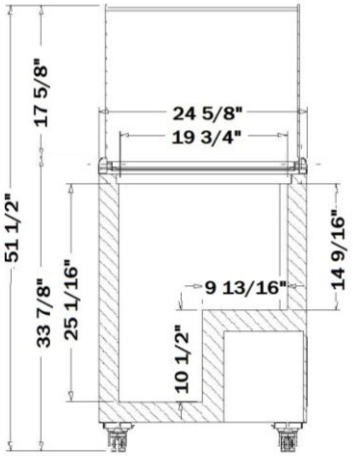

NOTE: Dimensions are in inches.
NOTE: Dimensions are all nominal lengths, use final spec sheet for exact data and model availability.
NOTE: Shipping weight does not include weight of pallets when needed.
NOTE: These merchandisers are designed for use in stores where temperature and humidity do not exceed listed operating conditions.
NOTE: We reserve the right to change specifications and product design without notice

©November 18, 2026 Excellence Industries

Excellence Industries

Profit from the Power of Partnership.



EURO

FLAT LID FREEZER

KEY FEATURES

- Five popular sizes
- Single-layer heat reflective glass lids
- Painted steel interior
- Casters standard, 2 locking
- 6-foot cord
- Environmentally friendly R-290 refrigerant
- Temperature range of -15°F to +5°F

ADVANTAGES

- Designed for flat lid freezer applications
- Glass lids support product visibility and quick access
- Painted steel interior for everyday commercial use



EURO-13HC

DOE LISTED

Complies with 2017 DOE standards
for commercial freezer and ice cream freezer

1950 Joe McIntosh Rd
Plant City, FL 33565
800.441.4014 | 813.870.0340
www.excellenceindustries.com



EURO

FLAT LID FREEZER

SPECIFICATIONS

Model	EURO-5HC	EURO-8HC	EURO-10HC	EURO-13HC	EURO-16HC
Cubic Feet	5.0	7.5	9.6	12.5	15.5
Approx. Weight (Net)	110 lb (50 kg)	121 lb (55 kg)	136 lb (62 kg)	163 lb (74 kg)	183 lb (83 kg)
Approx. Weight (Shipping)	120 lb (54 kg)	140 lb (64 kg)	157 lb (71 kg)	174 lb (79 kg)	197 lb (89 kg)
Running Amps	1.2	1.2	1.4	1.3	1.5
Compressor HP	1/5	1/5	1/4	1/4	1/4
3-Gal. Cans Capacity	4/2	4/2	6/4	8/6	10/8
Optional Baskets	2	3	4	5	6
Container Quantity	153	129	102	84	72

NEMA 5-15P



115 / 60 / 1

AVAILABLE OPTIONS

- 3 section hanging baskets
- Lid lock
- 3 gallon can holder kit; holds 4 tabs

PRODUCT INFORMATION

Click or scan QR to access spec sheets and technical information

EURO SERIES

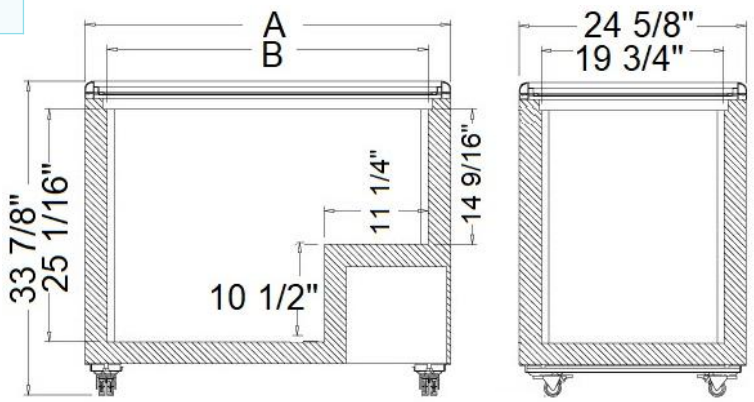

Model	A	B
EURO-5HC	24 5/8"	19 3/4"
EURO-8HC	33 3/8"	28 1/2"
EURO-10HC	39 5/8"	34 3/4"
EURO-13HC	47 1/2"	42 5/8"
EURO-16HC	59 3/8"	54 1/2"

NOTE: Dimensions are in inches.
NOTE: Dimensions are all nominal lengths, use final spec sheet for exact data and model availability.
NOTE: Shipping weight does not include weight of pallets when needed.
NOTE: These merchandisers are designed for use in stores where temperature and humidity do not exceed listed operating conditions.
NOTE: We reserve the right to change specifications and product design without notice

©November 18, 2026 Excellence Industries

Excellence Industries

Profit from the Power of Partnership.



HB

DUAL TEMP COOLER AND FREEZER

KEY FEATURES

- Wide range thermostat
- LED interior lighting
- Casters with 2 locking
- Painted steel interior
- Single layer heat reflective lids
- 12.75-foot cord / 9.75-foot accessible cord
- Environmentally friendly R-290 refrigerant
- Temperature range of -5°F to +40°F



HB-20HCD

ADVANTAGES

- Designed for dual temp cooler and freezer applications
- Optional baskets support organized merchandising
- Cold wall system supports consistent holding performance
- Free standing cabinet with casters simplifies placement

DOE LISTED

Complies with 2017 DOE standards for commercial cooler and freezer

1950 Joe McIntosh Rd
Plant City, FL 33565
800.441.4014 | 813.870.0340
www.excellenceindustries.com



HB

DUAL TEMP COOLER AND FREEZER

SPECIFICATIONS

Model	HB-6HCD	HB-7HCD	HB-11HCD	HB-14HCD	HB-17HCD	HB-20HCD
Cubic Feet	6.4	7.4	11.1	13.8	16.5	20.0
Approx. Weight (Net)	108 lb (49 kg)	117 lb (53 kg)	145 lb (66 kg)	166 lb (75 kg)	181 lb (82 kg)	213 lb (97 kg)
Approx. Weight (Shipping)	122 lb (55 kg)	130 lb (59 kg)	164 lb (74 kg)	187 lb (85 kg)	201 lb (91 kg)	238 lb (108 kg)
Running Amps	1.3	1.3	1.4	2.0	2.0	4.1
Compressor HP	1/7	1/7	1/5	1/4	1/4	1/2
Optional Baskets	2	3	4	5	6	7
Container Quantity	135	117	90	75	66	56

NEMA 5-15P



115 / 60 / 1

AVAILABLE OPTIONS

- Graphics
- Lock and key
- Dipper well
- Hanging baskets and dividers
- Gelato pans and holders
- Sneeze shield
- False bottoms

PRODUCT INFORMATION

Click or scan QR to access spec sheets and technical information

HB SERIES

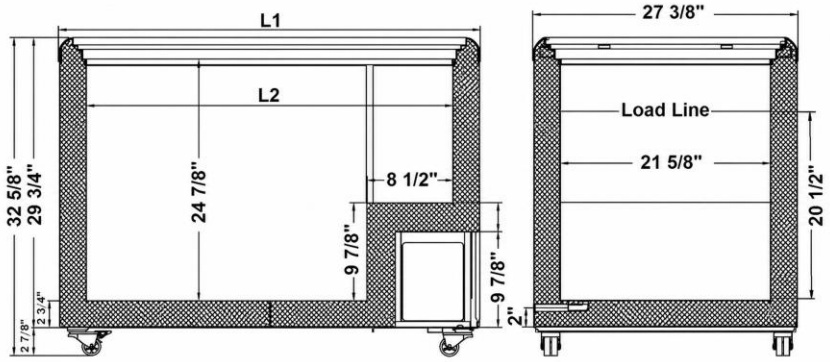

Model	L1	L2
HB-6HCD	28 1/2"	22 7/8"
HB-7HCD	31 1/2"	25 7/8"
HB-11HCD	43 1/2"	37 7/8"
HB-14HCD	51 3/4"	46 1/8"
HB-17HCD	59 1/2"	53 3/4"
HB-20HCD	70 5/8"	65 1/8"

NOTE: Dimensions are in inches.
NOTE: Dimensions are all nominal lengths, use final spec sheet for exact data and model availability.
NOTE: Shipping weight does not include weight of pallets when needed.
NOTE: These merchandisers are designed for use in stores where temperature and humidity do not exceed listed operating conditions.
NOTE: We reserve the right to change specifications and product design without notice

©November 18, 2026 Excellence Industries

Excellence Industries

Profit from the Power of Partnership.



HBD

DIPPING CABINET

KEY FEATURES

- Mezzanine shelf
- LED interior lighting
- Single layer heat reflective lids
- Painted steel interior
- 3-gallon tub holders
- 12.75-foot cord / 9.75-foot accessible cord
- Environmentally friendly R-290 refrigerant
- Temperature range of -15°F to +25°F

ADVANTAGES

- Designed for dipping cabinet applications
- Cold wall system supports consistent product temperatures
- Extra storage and tub holders support busy dipping service



HBD-8HC

DOE LISTED

Complies with 2017 DOE standards for commercial service over counter freezer and service over counter ice cream freezer

1950 Joe McIntosh Rd
Plant City, FL 33565
800.441.4014 | 813.870.0340
www.excellenceindustries.com



HBD DIPPING CABINET

SPECIFICATIONS

Model	HBD-4HC	HBD-6HC	HBD-8HC	HBD-10HC	HBD-12HC
Cubic Feet	6.4	11.1	13.8	16.5	20.0
Approx. Weight (Net)	163 lb (74 kg)	214 lb (97 kg)	265 lb (120 kg)	295 lb (134 kg)	343 lb (156 kg)
Approx. Weight (Shipping)	188 lb (85 kg)	253 lb (115 kg)	292 lb (132 kg)	320 lb (145 kg)	376 lb (171 kg)
Running Amps	1.3	1.4	2.0	2.0	4.1
Compressor HP	1/7	1/5	1/4	1/4	1/2
3-Gal. Cans Displayed/ Storage	4 / 2	6 / 4	8 / 6	10 / 8	12 / 10
Container Quantity	99	67	56	49	42

NEMA 5-15P



115 / 60 / 1

AVAILABLE OPTIONS

- Lock and key
- Dipper well
- Graphics
- Night covers

Tub Holder



Can Cover

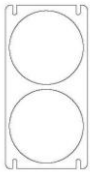

PRODUCT INFORMATION

Click or scan QR to access spec sheets and technical information

HBD SERIES

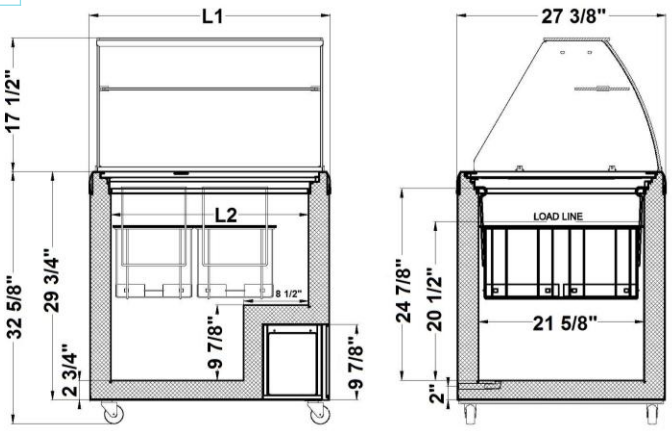

Model	L1	L2
HBD-4HC	28 1/2"	22 7/8"
HBD-6HC	43 1/2"	37 7/8"
HBD-8HC	51 3/4"	46 1/8"
HBD-10HC	59 1/2"	53 7/8"
HBD-12HC	70 5/8"	65 1/8"

NOTE: Dimensions are in inches.
NOTE: Dimensions are all nominal lengths, use final spec sheet for exact data and model availability.
NOTE: Shipping weight does not include weight of pallets when needed.
NOTE: These merchandisers are designed for use in stores where temperature and humidity do not exceed listed operating conditions.
NOTE: We reserve the right to change specifications and product design without notice

©November 18, 2026 Excellence Industries

Excellence Industries

Excellence Industries

Profit from the Power of Partnership.



HBG

GELATO SCOOPING CABINET

KEY FEATURES

- Single layer heat reflective lids
- LED interior lighting
- Cold wall evaporator
- Mezzanine shelf
- 5-liter gelato pans and holder
- 12.75-foot cord / 9.75-foot accessible cord
- Environmentally friendly R-290 refrigerant
- Temperature range of -5°F to +40°F

ADVANTAGES

- Designed for gelato scooping cabinet applications
- Standard stainless steel pans support gelato merchandising
- Cold wall system supports consistent product temperatures



HBG-12HC

DOE LISTED

Complies with 2017 DOE standards for commercial service over counter freezer and service over counter ice cream freezer

1950 Joe McIntosh Rd
Plant City, FL 33565
800.441.4014 | 813.870.0340
www.excellenceindustries.com



HBG

GELATO SCOOPING CABINET

SPECIFICATIONS

Model	HBG-4HC	HBG-7HC	HBG-9HC	HBG-10HC	HBG-12HC
Cubic Feet	6.4	11.1	13.8	16.5	20.0
Approx. Weight (Net)	164 lb (74 kg)	218 lb (99 kg)	268 lb (122 kg)	298 lb (135 kg)	346 lb (157 kg)
Approx. Weight (Shipping)	193 lb (88 kg)	262 lb (119 kg)	305 lb (138 kg)	334 lb (151 kg)	394 lb (179 kg)
Running Amps	1.3	1.4	2.0	2.0	4.1
Compressor HP	1/7	1/5	1/4	1/4	1/2
Gelato Pans Displayed	4	7	9	10	12
Container Quantity	99	67	56	49	42

NEMA 5-15P



115 / 60 / 1

AVAILABLE OPTIONS

- Lock and key
- Dipper well
- Graphics

PRODUCT INFORMATION

Click or scan QR to access spec sheets and technical information

HBG SERIES

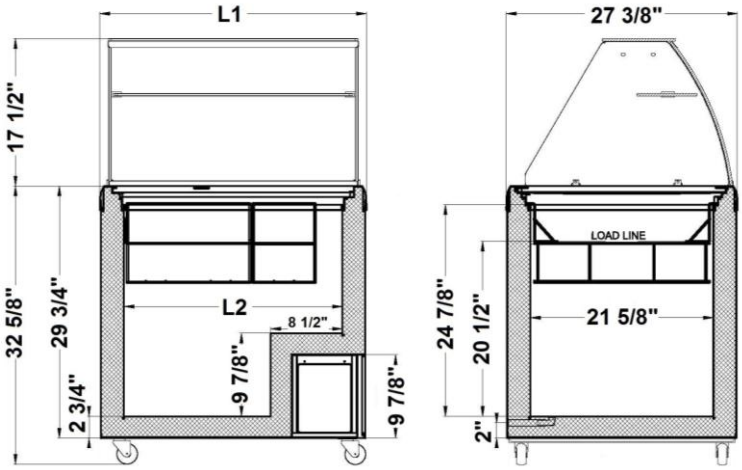

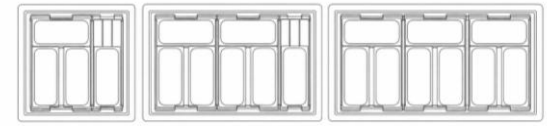

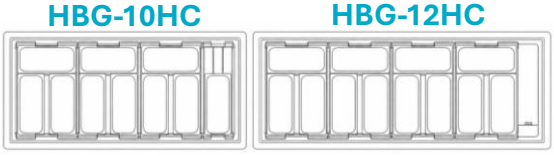





Model	L1	L2
HBG-4HC	28 1/2"	22 7/8"
HBG-7HC	43 1/2"	37 7/8"
HBG-9HC	51 3/4"	46 1/8"
HBG-10HC	59 1/2"	53 7/8"
HBG-12HC	70 5/8"	65 1/8"

NOTE: Dimensions are in inches.
NOTE: Dimensions are all nominal lengths, use final spec sheet for exact data and model availability.
NOTE: Shipping weight does not include weight of pallets when needed.
NOTE: These merchandisers are designed for use in stores where temperature and humidity do not exceed listed operating conditions.
NOTE: We reserve the right to change specifications and product design without notice

©November 18, 2026 Excellence Industries

Excellence Industries

Excellence Industries

Profit from the Power of Partnership.



HL

LOW TEMP DISPLAY FREEZER AND ICE CREAM FREEZER

KEY FEATURES

- Painted steel interior
- Casters with 2 locking
- LED interior lighting
- Single layer heat reflective lids
- 12.75-foot cord / 9.75-foot accessible cord
- Environmentally friendly R-290 refrigerant
- Temperature range of -15° to +25°F



HL-11HC

ADVANTAGES

- Low temp display freezer and ice cream freezer format
- Free standing cabinet with casters simplifies placement
- Cold wall evaporator supports consistent product temperature

DOE LISTED

Complies with 2017 DOE standards
for commercial freezers and ice cream freezer

1950 Joe McIntosh Rd
Plant City, FL 33565
800.441.4014 | 813.870.0340
www.excellenceindustries.com



HL

LOW TEMP DISPLAY FREEZER AND ICE CREAM FREEZER

SPECIFICATIONS

Model	HL-6HC	HL-7HC	HL-11HC	HL-14HC	HL-17HC	HL-20HC
Cubic Feet	6.4	7.4	11.1	13.8	16.5	20.0
Approx. Weight (Net)	108 lb (49 kg)	117 lb (53 kg)	145 lb (66 kg)	166 lb (75 kg)	181 lb (82 kg)	213 lb (97 kg)
Approx. Weight (Shipping)	122 lb (55 kg)	130 lb (59 kg)	164 lb (74 kg)	187 lb (85 kg)	201 lb (91 kg)	238 lb (108 kg)
Running Amps	1.3	1.3	1.4	2.0	2.0	4.1
Compressor HP	1/7	1/7	1/5	1/4	1/4	1/2
Optional Baskets	2	3	4	5	6	7
Container Quantity	135	117	90	75	66	56

NEMA 5-15P



115 / 60 / 1

AVAILABLE OPTIONS

- Graphics
- Lock and key
- Dipper well
- Hanging baskets with product dividers
- 3-gallon hanging baskets holds 2 tubs
- Gelato pans and holders
- Sneeze shield
- False bottoms

PRODUCT INFORMATION

Click or scan QR to access spec sheets and technical information

HL SERIES

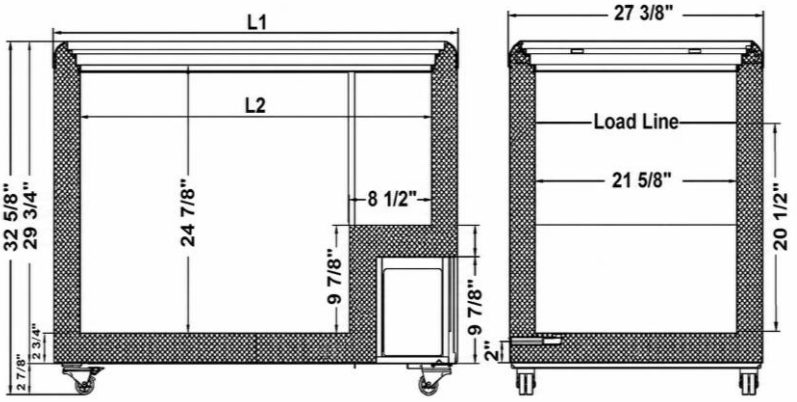

Model	L1	L2
HL-6HCD	28 1/2"	22 7/8"
HL-7HCD	31 1/2"	25 7/8"
HL-11HCD	43 1/2"	37 7/8"
HL-14HCD	51 3/4"	46 1/8"
HL-17HCD	59 1/2"	53 3/4"
HL-20HCD	70 5/8"	65 1/8"

NOTE: Dimensions are in inches.
NOTE: Dimensions are all nominal lengths, use final spec sheet for exact data and model availability.
NOTE: Shipping weight does not include weight of pallets when needed.
NOTE: These merchandisers are designed for use in stores where temperature and humidity do not exceed listed operating conditions.
NOTE: We reserve the right to change specifications and product design without notice

©November 18, 2026 Excellence Industries

Excellence Industries

Excellence Industries

Profit from the Power of Partnership.



HM

JUMBO FREEZER AND ICE CREAM FREEZER

KEY FEATURES

- 8 baskets with 3 dividers each included
- Easy to open lids
- Casters standard with 2 locking
- Double sided LED lighting
- Painted steel inner tank
- 12.75-foot cord / 9.75-foot accessible cord
- Environmentally friendly R-290 refrigerant
- Temperature range of -15°F to +15°F



HM-23HC

ADVANTAGES

- Jumbo freezer and ice cream freezer format
- Large HM-23HC cabinet for jumbo applications
- Can shop from both sides
- Can be used as an island
- Easily movable

DOE LISTED

Complies with 2017 DOE standards
for commercial freezer and ice cream freezer

1950 Joe McIntosh Rd
Plant City, FL 33565
800.441.4014 | 813.870.0340
www.excellenceindustries.com



HM

JUMBO FREEZER AND ICE CREAM FREEZER

SPECIFICATIONS

Model	HM-23HC
Cubic Feet	23.3
Approx. Weight (Net)	229 lb (104 kg)
Approx. Weight (Shipping)	287 lb (130 kg)
Running Amps	5.5
Compressor HP	3/4
Container Quantity	39

NEMA 5-15P



115 / 60 / 1

AVAILABLE OPTIONS

- False bottoms (special order)
- Graphics
- Partitions (special order)

PRODUCT INFORMATION

Click or scan QR to access spec sheets and technical information

HM-23HC

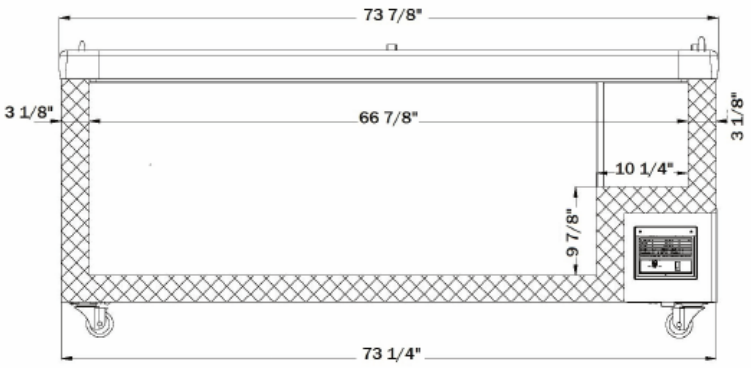

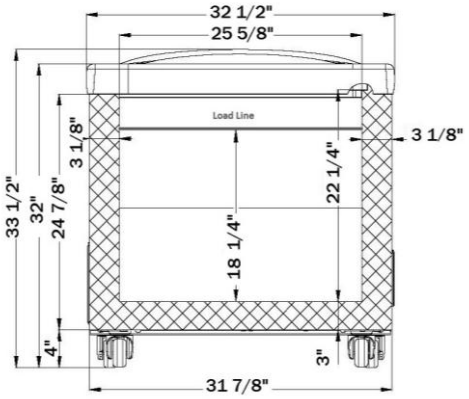

NOTE: Dimensions are in inches.
NOTE: Dimensions are all nominal lengths, use final spec sheet for exact data and model availability.
NOTE: Shipping weight does not include weight of pallets when needed.
NOTE: These merchandisers are designed for use in stores where temperature and humidity do not exceed listed operating conditions.
NOTE: We reserve the right to change specifications and product design without notice

©November 18, 2026 Excellence Industries

Excellence Industries

Profit from the Power of Partnership.



HR

SUPERMARKET DUAL TEMPERATURE DISPLAY

KEY FEATURES

- Excellent product visibility
- Bumper standard
- Auto defrosting switch
- LED lighting
- Product dividers included
- 12.75-foot cord / 9.75-foot accessible cord
- Environmentally friendly R-290 refrigerant
- Temperature range of -15°F to +15°F

ADVANTAGES

- Units can be combined into an island merchandiser format for flexible floor placement
- Can be used as a stand-alone unit or in a line up
- Maximizes floor space with an end cabinet
- Modular system allows for desired coverage



HR-18H / 2x HR-21H

DOE LISTED

Complies with 2017 DOE standards
for commercial cooler, freezer and ice cream freezer

1950 Joe McIntosh Rd
Plant City, FL 33565
800.441.4014 | 813.870.0340
www.excellenceindustries.com



HR

SUPERMARKET DUAL TEMPERATURE DISPLAY

SPECIFICATIONS

Model	HR-18H	HR-21H
Cubic Feet	24.9	30.9
Approx. Weight (Net)	254 lb (115 kg)	304 lb (138 kg)
Approx. Weight (Shipping)	285 lb (129 kg)	337 lb (153 kg)
Running Amps	4.1	4.1
Compressor HP	1/2	1/2
Container Quantity	26	26

NEMA 5-15P



115 / 60 / 1

AVAILABLE OPTIONS

- Spacing grill for merging units

Flexible Location Options

- Can be used as a stand alone unit 
- Can be used in a line up 
- Maximizes the use of floor space with an end cabinet 

PRODUCT INFORMATION

Click or scan QR to access spec sheets and technical information

HR-18H

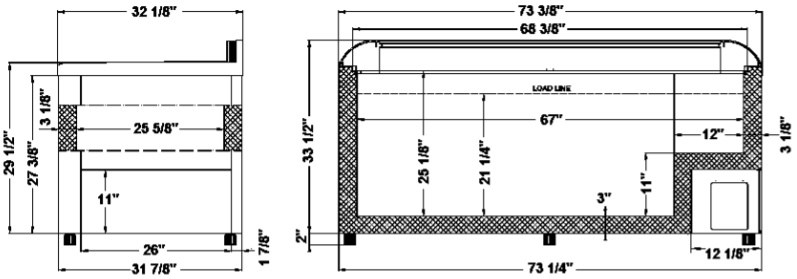

HR-21H

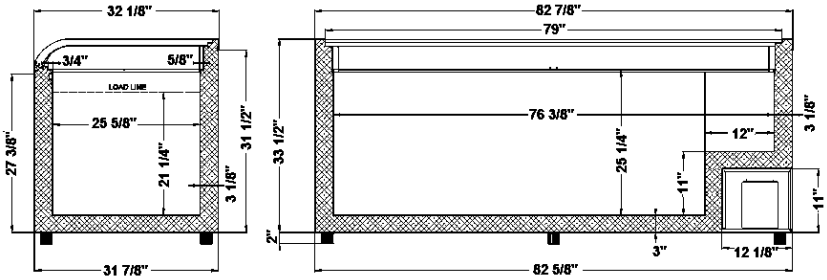

NOTE: Dimensions are in inches.
NOTE: Dimensions are all nominal lengths, use final spec sheet for exact data and model availability.
NOTE: Shipping weight does not include weight of pallets when needed.
NOTE: These merchandisers are designed for use in stores where temperature and humidity do not exceed listed operating conditions.
NOTE: We reserve the right to change specifications and product design without notice

©November 18, 2026 Excellence Industries

Excellence Industries

Excellence Industries

Profit from the Power of Partnership.



MB

DUAL TEMPERATURE MINI BUNKER COOLER AND FREEZER

KEY FEATURES

- Cold wall evaporator
- Baskets include 2 dividers each
- Casters standard, front locking
- Wide range thermostat
- 12.75-foot cord / 9.75-foot accessible cord
- Environmentally friendly R-600a refrigerant
- Temperature range -5°F to +40°F

ADVANTAGES

- Cooler or freezer operation in one cabinet
- Compact mini bunker footprint for tight merchandising areas
- Sliding glass doors improve product visibility and access



MB-2HCD

DOE LISTED

Complies with 2017 DOE standards for commercial cooler and freezer

1950 Joe McIntosh Rd
Plant City, FL 33565
800.441.4014 | 813.870.0340
www.excellenceindustries.com



MB

DUAL TEMPERATURE MINI BUNKER COOLER AND FREEZER

SPECIFICATIONS

Model	MB-2HCD
Cubic Feet	4.8
Approx. Weight (Net)	97 lb (44 kg)
Approx. Weight (Shipping)	105 lb (48 kg)
Running Amps	1.0
Compressor HP	1/9
Container Quantity	168

NEMA 5-15P



115 / 60 / 1

PRODUCT INFORMATION

Click or scan QR to access spec sheets and technical information

AVAILABLE OPTIONS

- LED light bar
- Lock & key
- Graphics



Shown with optional LED bar

MB-2HCD

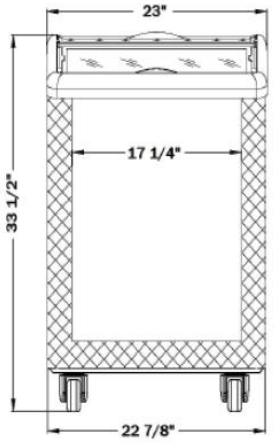

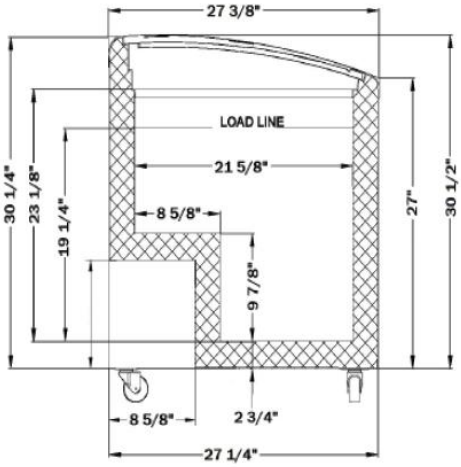

Optional light bar adds 11 3/8”

NOTE: Dimensions are in inches.
NOTE: Dimensions are all nominal lengths, use final spec sheet for exact data and model availability.
NOTE: Shipping weight does not include weight of pallets when needed.
NOTE: These merchandisers are designed for use in stores where temperature and humidity do not exceed listed operating conditions.
NOTE: We reserve the right to change specifications and product design without notice

©November 18, 2026 Excellence Industries

Excellence Industries

Profit from the Power of Partnership.



MC

CURVED MINI BUNKER FREEZER AND ICE CREAM FREEZER

KEY FEATURES

- Painted steel interior
- Cold wall evaporator
- Baskets include 2 dividers each
- Casters standard, 2 front locking
- 12.75-foot cord / 9.75-foot accessible cord
- Environmentally friendly R-600a refrigerant
- Temperature range of -15°F to +20°F



MC-2HC

ADVANTAGES

- Freezer or ice cream freezer operation in one cabinet
- Compact mini bunker footprint for tight merchandising areas
- Sliding glass doors improve product visibility and access

DOE LISTED

Complies with 2017 DOE standards
for commercial freezer and ice cream freezer

1950 Joe McIntosh Rd
Plant City, FL 33565
800.441.4014 | 813.870.0340
www.excellenceindustries.com



MC

CURVED MINI BUNKER FREEZER AND ICE CREAM FREEZER

SPECIFICATIONS

Model	MC-2HC
Cubic Feet	4.8
Approx. Weight (Net)	100 lb (45 kg)
Approx. Weight (Shipping)	108 lb (49 kg)
Running Amps	1.0
Compressor HP	1/9
Container Quantity	159

NEMA 5-15P



115 / 60 / 1

PRODUCT INFORMATION

Click or scan QR to access spec sheets and technical information

AVAILABLE OPTIONS

- LED light bar
- Lock & key
- Graphics



Shown with optional LED bar

MC-2HC

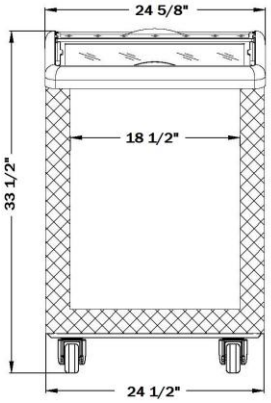

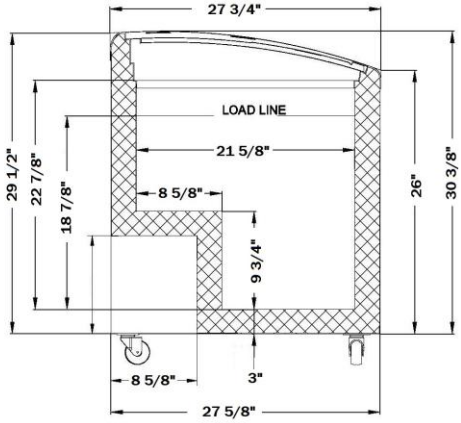

Optional light bar adds 10 1/2” height and 1 1/4” depth

NOTE: Dimensions are in inches.
NOTE: Dimensions are all nominal lengths, use final spec sheet for exact data and model availability.
NOTE: Shipping weight does not include weight of pallets when needed.
NOTE: These merchandisers are designed for use in stores where temperature and humidity do not exceed listed operating conditions.
NOTE: We reserve the right to change specifications and product design without notice

©November 18, 2026 Excellence Industries

Excellence Industries

Profit from the Power of Partnership.



MCT

FREEZER AND ICE CREAM FREEZER WITH MERCHANDISING COUNTERTOP

KEY FEATURES

- Baskets included
- Digital thermostat on MCT-4 & 6
- Glass front on MCT-4 & 6
- Merchandising shelf for dry goods
- Casters with 2 locking on MCT-2
- 12.75-foot cord / 9.75-foot accessible cord
- Environmentally friendly hydrocarbon refrigerant
- Temperature range of -15°F to 15°F

ADVANTAGES

- Merchandising countertop supports dry-good display above frozen inventory
- Standard widths to provide easier placement
- Compatible with Excellence CTF-3HC or CTF-4HCMS countertop freezers



MCT-4

DOE LISTED

Complies with 2017 DOE standards
for commercial freezer and ice cream freezer

1950 Joe McIntosh Rd
Plant City, FL 33565
800.441.4014 | 813.870.0340
www.excellenceindustries.com



MCT FREEZER AND ICE CREAM FREEZER WITH MERCHANDISING COUNTERTOP

SPECIFICATIONS

Model	MCT-2	MCT-4	MCT-6
Cubic Feet	5.8	13.2	21.2
Approx. Weight (Net)	130 lb (59 kg)	231 lb (105 kg)	311 lb (141 kg)
Approx. Weight (Shipping)	147 lb (67 kg)	263 lb (119 kg)	367 lb (166 kg)
Running Amps	1.0	2.0	4.1
Compressor HP	1/5	1/4	3/4
Refrigerant	R-600a	R-290	R-290
Standard Baskets	2	5	8
Container Quantity	108	42	26

NEMA 5-15P



115 / 60 / 1

AVAILABLE OPTIONS

- Graphics
- Casters



Double Combo-MCT-4HC with 2 optional CTF-3HC



Combo-MCT-2HC with 1 optional CTF-3HC

PRODUCT INFORMATION

Click or scan QR to access spec sheets and technical information

MCT Series

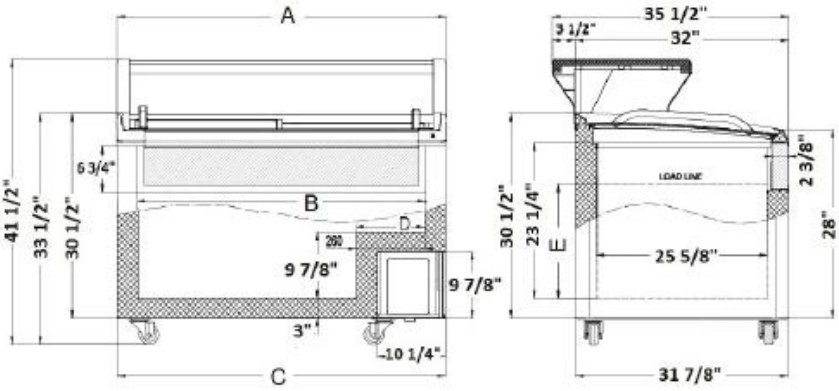

Model	A	B	C	D	E
MCT-2	25”	18 1/2”	24 3/4”	18 1/2”	19 3/8”
MCT-4	49 3/8”	42 7/8”	49 1/4”	10 1/4”	17”
MCT-6	73 3/8”	67”	73 1/4”	10 1/4”	17”

MCT-2 does not have the front glass shown on the drawing above

NOTE: Dimensions are in inches.
NOTE: Dimensions are all nominal lengths, use final spec sheet for exact data and model availability.
NOTE: Shipping weight does not include weight of pallets when needed.
NOTE: These merchandisers are designed for use in stores where temperature and humidity do not exceed listed operating conditions.
NOTE: We reserve the right to change specifications and product design without notice

©November 18, 2026 Excellence Industries

Excellence Industries

Excellence Industries

Profit from the Power of Partnership.



RF

BARREL FREEZER AND ICE CREAM FREEZER

KEY FEATURES

- Cylinder shaped, looks great anywhere
- Divider: 4 sections
- Flip top accessible from any side
- Big impression in a small footprint
- Casters standard
- 8.25-foot cord
- Environmentally friendly R-600a refrigerant
- Temperature range of -15°F to +5°F

ADVANTAGES

- Barrel format creates an attention-grabbing display
- Flip-top access from any side supports flexible placement
- Four-section divider helps organize a compact merchandising footprint



RF-77HC

DOE LISTED

Complies with 2017 DOE standards
for commercial freezer and ice cream freezer

1950 Joe McIntosh Rd
Plant City, FL 33565
800.441.4014 | 813.870.0340
www.excellenceindustries.com



RF

BARREL FREEZER AND ICE CREAM FREEZER

SPECIFICATIONS

Model	RF-77HC
Cubic Feet	2.5
Approx. Weight (Net)	64 lb (29 kg)
Approx. Weight (Shipping)	73 lb (33 kg)
Running Amps	2.1
Compressor HP	2/7
Container Quantity	238

NEMA 5-15P



115 / 60 / 1

PRODUCT INFORMATION

Click or scan QR to access spec sheets and technical information

AVAILABLE OPTIONS

- Graphics

RF-77HC

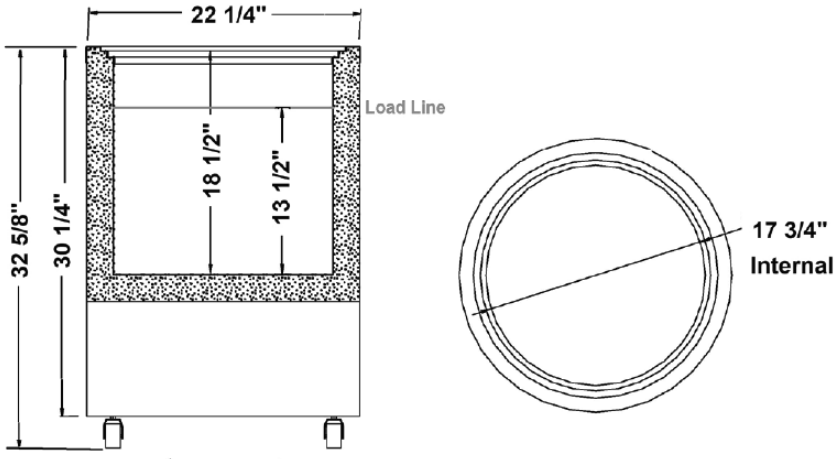

NOTE: Dimensions are in inches.
NOTE: Dimensions are all nominal lengths, use final spec sheet for exact data and model availability.
NOTE: Shipping weight does not include weight of pallets when needed.
NOTE: These merchandisers are designed for use in stores where temperature and humidity do not exceed listed operating conditions.
NOTE: We reserve the right to change specifications and product design without notice

©November 18, 2026 Excellence Industries

Excellence Industries

Excellence Industries

Profit from the Power of Partnership.



SM

DELUXE SUPERMARKET ICE CREAM FREEZER

KEY FEATURES

- Three-sided glass
- Excellent product visibility
- Convenient push lids
- Baskets with product dividers standard
- Painted steel, LED lighted interior
- 12.75-foot cord / 9.75-foot accessible cord
- Environmentally friendly R-290 refrigerant
- Temperature range of -15°F to +5°F



SM-6

ADVANTAGES

- Three-sided glass and push lids help showcase ice cream while keeping access convenient
- Baskets with product dividers standard support organized merchandising

DOE LISTED

Complies with 2017 DOE standards for commercial ice cream freezer

1950 Joe McIntosh Rd
Plant City, FL 33565
800.441.4014 | 813.870.0340
www.excellenceindustries.com



SM

DELUXE SUPERMARKET ICE CREAM FREEZER

SPECIFICATIONS

Model	SM-6
Cubic Feet	15.2
Approx. Weight (Net)	265 lb (120 kg)
Approx. Weight (Shipping)	314 lb (142 kg)
Running Amps	4.1
Compressor HP	1/2
No. of Baskets	8
Container Quantity	26

NEMA 5-15P



115 / 60 / 1

AVAILABLE OPTIONS

- Graphics
- Lock and key
- Wire racks with dividers

PRODUCT INFORMATION

Click or scan QR to access spec sheets and technical information

SM-6

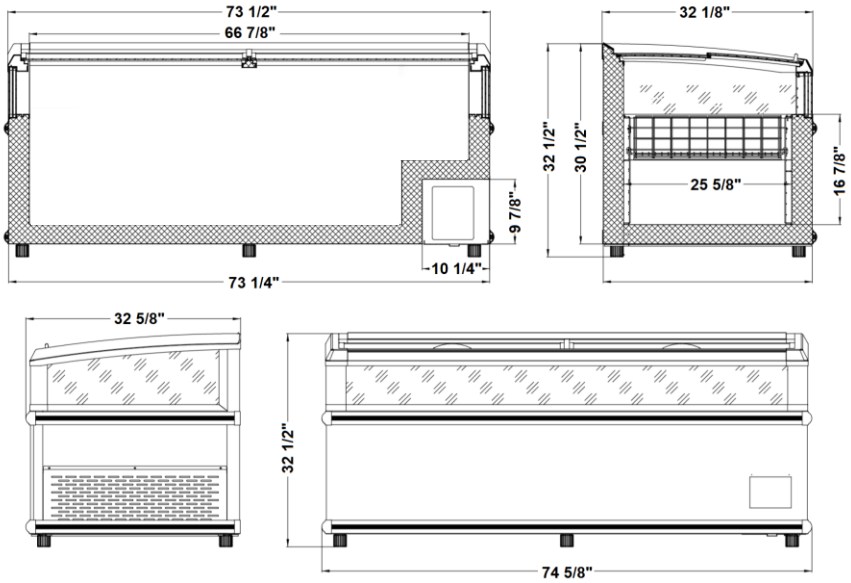

NOTE: Dimensions are in inches.
NOTE: Dimensions are all nominal lengths, use final spec sheet for exact data and model availability.
NOTE: Shipping weight does not include weight of pallets when needed.
NOTE: These merchandisers are designed for use in stores where temperature and humidity do not exceed listed operating conditions.
NOTE: We reserve the right to change specifications and product design without notice

©November 18, 2026 Excellence Industries

Excellence Industries

Excellence Industries

Profit from the Power of Partnership.



SPOT

DUAL TEMPERATURE MERCHANDISER

KEY FEATURES

- Standard with wire shelf
- Drain
- Removable lids
- Dual temp cooler or freezer
- Casters with 2 locking
- 12.75-foot cord / 9.75-foot accessible cord
- Environmentally friendly R-290 refrigerant
- Temperature range of 0°F to +40°F

ADVANTAGES

- Dual-temperature operation supports cooler or freezer merchandising with or without lids
- Two sizes cover compact and higher-capacity horizontal displays
- Casters support flexible retail placement



SPOT-6HCD

DOE LISTED

Complies with 2017 DOE standards
for commercial cooler and freezer with or without doors

1950 Joe McIntosh Rd
Plant City, FL 33565
800.441.4014 | 813.870.0340
www.excellenceindustries.com



SPOT

DUAL TEMPERATURE MERCHANDISER

SPECIFICATIONS

Model	SPOT-4HCD	SPOT-6HCD
Cubic Feet	8.3	11.5
Approx. Weight (Net)	159 lb (72 kg)	172 lb (78 kg)
Approx. Weight (Shipping)	172 lb (78 kg)	192 lb (87 kg)
Running Amps	1.4	2.0
Compressor HP	1/3	1/3
No. of 12" Facings	4	6
Container Quantity	48	42

NEMA 5-15P



115 / 60 / 1

AVAILABLE OPTIONS

- Graphics

PRODUCT INFORMATION

Click or scan QR to access spec sheets and technical information

SPOT Series

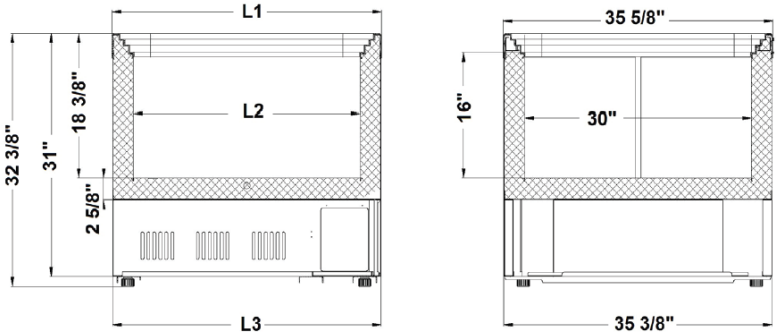

Model	L1	L2	L3
Spot 4	35 5/8”	30”	35 1/2”
Spot 6	47 3/8”	41 3/4”	47 1/4”

NOTE: Dimensions are in inches.
NOTE: Dimensions are all nominal lengths, use final spec sheet for exact data and model availability.
NOTE: Shipping weight does not include weight of pallets when needed.
NOTE: These merchandisers are designed for use in stores where temperature and humidity do not exceed listed operating conditions.
NOTE: We reserve the right to change specifications and product design without notice

©November 18, 2026 Excellence Industries

Excellence Industries

Profit from the Power of Partnership.



VB

CURVED LID DISPLAY FREEZER & ICE CREAM FREEZER

KEY FEATURES

- Single layer heat reflective lids
- Baskets with product dividers included
- LED lighted interior
- Cold wall evaporator
- Casters with 2 locking
- 12.75-foot cord / 9.75-foot accessible cord
- Environmentally friendly R-290 refrigerant
- Temperature range of -15°F to +15°F

ADVANTAGES

- Curved-lid format supports clear merchandising
- Six model widths scale from compact to high-capacity display programs
- Included baskets and dividers support organized presentation and stocking
- Extra storage below baskets



VB-5HC

DOE LISTED

Complies with 2017 DOE standards
for commercial freezer and commercial ice cream freezer

1950 Joe McIntosh Rd
Plant City, FL 33565
800.441.4014 | 813.870.0340
www.excellenceindustries.com



VB

CURVED LID DISPLAY FREEZER & ICE CREAM FREEZER

SPECIFICATIONS

Model	VB-2HC	VB-3HC	VB-4HC	VB-5HC	VB-6HC	VB-7HC
Cubic Feet	6.3	7.3	10.4	12.9	16.3	18.5
Approx. Weight (Net)	112 lb (51 kg)	117 lb (53 kg)	146 lb (66 kg)	166 lb (75 kg)	188 lb (85 kg)	202 lb (92 kg)
Approx. Weight (Shipping)	128 lb (58 kg)	133 lb (60 kg)	159 lb (72 kg)	181 lb (82 kg)	202 lb (92 kg)	222 lb (101 kg)
Running Amps	1.3	1.3	1.4	2.0	2.0	3.0
Compressor HP	1/7	1/7	1/5	1/4	1/4	1/5
Baskets	2	3	4	5	6	7
Container Quantity	126	117	94	80	66	57

NEMA 5-15P



115 / 60 / 1

AVAILABLE OPTIONS

- Graphics
- Lock and key
- Built in analog thermometer - full container orders only
- False bottoms

PRODUCT INFORMATION

Click or scan QR to access spec sheets and technical information

VB Series

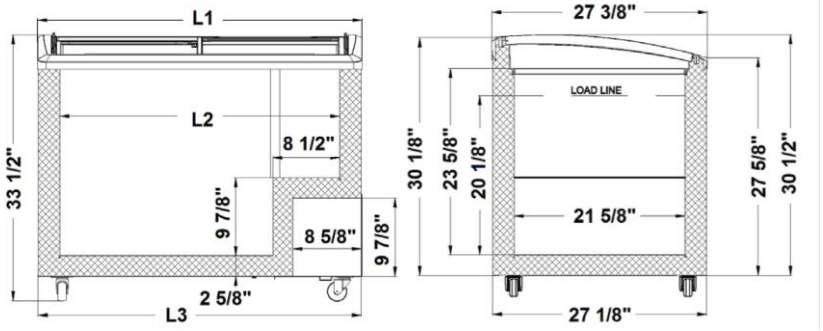

Model	L1	L2	L3
VB-2	28 1/2"	22 7/8"	28 3/8"
VB-3	31 1/2"	25 7/8"	31 3/8"
VB-4	41 1/8"	35 1/2"	41"
VB-5	48 7/8"	41 1/8"	48 5/8"
VB-6	59 1/2"	53 3/4"	59 1/4"
VB-7	66 3/8"	60 5/8"	66 1/8"

NOTE: Dimensions are in inches.
NOTE: Dimensions are all nominal lengths, use final spec sheet for exact data and model availability.
NOTE: Shipping weight does not include weight of pallets when needed.
NOTE: These merchandisers are designed for use in stores where temperature and humidity do not exceed listed operating conditions.
NOTE: We reserve the right to change specifications and product design without notice

©November 18, 2026 Excellence Industries

Excellence Industries

Profit from the Power of Partnership.



VBN

NARROW BUNKER

KEY FEATURES

- Single layer reflective lid
- Cold wall evaporator
- Casters with 2 locking
- Baskets with product dividers
- Adjustable thermostat
- LED lighted interior
- 10.75-foot cord / 9.75-foot accessible cord
- Environmentally friendly R-600a refrigerant

ADVANTAGES

- Narrow bunker format supports compact frozen merchandising
- Dual-temp and freezer models support a wider merchandising program
- Baskets and dividers support organized product presentation



VBN-3D / VBN-3

DOE LISTED

VBN-3D Complies with 2017 DOE standards for cooler, freezer, cooler without lids and freezer without lids
VBN-3 Complies with 2017 DOE standards for freezer and ice cream freezer
VBN-4D Complies with 2017 DOE standards for cooler, freezer, and cooler without lids
VBN-4 Complies with 2017 DOE standards for freezer, ice cream freezer, and freezer without lid

1950 Joe McIntosh Rd
Plant City, FL 33565
800.441.4014 | 813.870.0340
www.excellenceindustries.com



VBN

NARROW BUNKER

SPECIFICATIONS

Model	VBN-3D	VBN-3	VBN-4D	VBN-4
Cubic Feet	4.0	4.0	5.8	5.8
Approx Weight (Net)	84 lb (38 kg)	84 lb (38 kg)	109 lb (49 kg)	109 lb (49 kg)
Approx Weight (Shipping)	94 lb (43 kg)	94 lb (43 kg)	120 lb (54 kg)	120 lb (54 kg)
Running Amps	1.0	1.0	1.3	1.3
Compressor HP	1/8	1/8	1/7	1/7
Temperature	-5°F to +40°F	-15°F to +25°F	-5°F to +40°F	-15°F to +25°F
Baskets	3	3	4	4
Container Qty	180	180	123	123

NEMA 5-15P



115 / 60 / 1

AVAILABLE OPTIONS

- Graphics
- Lock and key
- Hanging shelf

PRODUCT INFORMATION

Click or scan QR to access spec sheets and technical information

VBN-3D / VBN-3

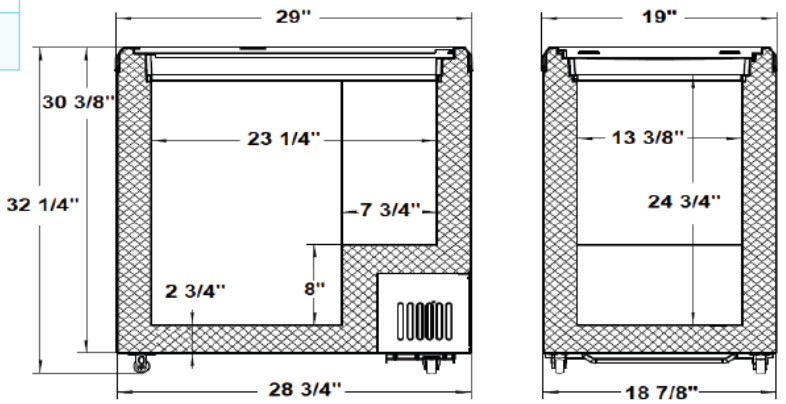

VBN-4D / VBN-4

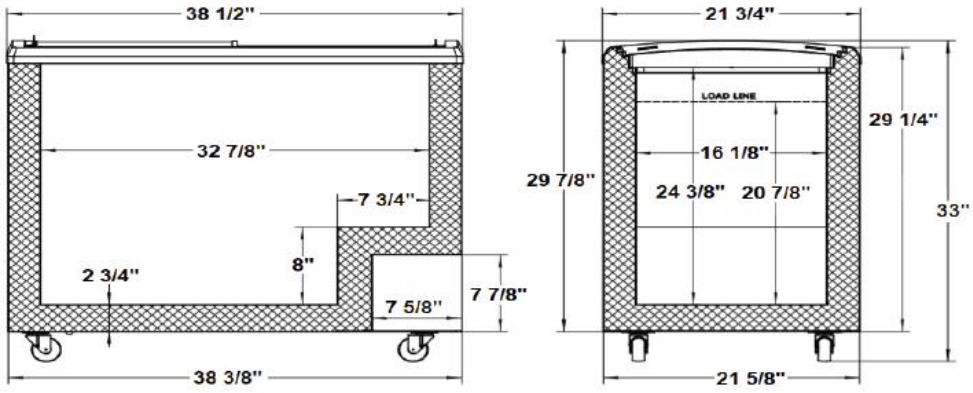

NOTE: Dimensions are in inches.
NOTE: Dimensions are all nominal lengths, use final spec sheet for exact data and model availability.
NOTE: Shipping weight does not include weight of pallets when needed.
NOTE: These merchandisers are designed for use in stores where temperature and humidity do not exceed listed operating conditions.
NOTE: We reserve the right to change specifications and product design without notice

©November 18, 2026 Excellence Industries

Excellence Industries





Vertical Merchandiser

GDF	44
GDR	46
GDR-10SL	48
GDR-13SL	50
GDR-14P	52
NG	54
OMNIVIEW	56
PANORAMIC	58
SLF	60
TKO	62
TKOF	64
VF	66
VR	68

Excellence Industries

Profit from the Power of Partnership.



GDF

GLASS DOOR FREEZER

KEY FEATURES

- LED lighted interior
- Stainless steel bottom pan
- Digital temperature control with wide range setting
- Low-noise compressor
- Auto defrost
- 6.5-foot cord
- Environmentally friendly R-290 refrigerant
- Temperature range of -20°F to 0°F

ADVANTAGES

- Modern design to attract customers
- Lower maintenance time and costs
- Illumined signs to draw attention (GDF-13, GDF-22, GDF-43)



GDF-13

DOE LISTED

Complies with 2017 DOE standards for commercial freezer and ice cream freezer
GDF-43 freezer only

1950 Joe McIntosh Rd
Plant City, FL 33565
800.441.4014 | 813.870.0340
www.excellenceindustries.com



GDF

GLASS DOOR FREEZER

SPECIFICATIONS

Model	GDF-9M	GDF-13	GDF-15	GDF-22	GDF-43
Cubic Feet	7.3	12.0	14.1	22.7	37.1
Approx. Weight (Net)	210 lb (95 kg)	245 lb (111 kg)	310 lb (141 kg)	340 lb (154 kg)	505 lb (229 kg)
Approx. Weight (Shipping)	225 lb (102 kg)	274 lb (124 kg)	330 lb (150 kg)	362 lb (164 kg)	567 lb (257 kg)
Running Amps	1.8	4.5	5.0	4.6	7.5
Compressor HP	1/4	1/2	1/2	1/2	1
Optional Baskets	3	3	6	4	8
Container Quantity	66	54	38	32	27

NEMA 5-15P



115 / 60 / 1

AVAILABLE OPTIONS

- Graphics
- Lock for GDF-9M, GDF-13, and GDF-22
- Basket shelves
- Basket shelf dividers

PRODUCT INFORMATION

Click or scan QR to access spec sheets and technical information

GDF-13

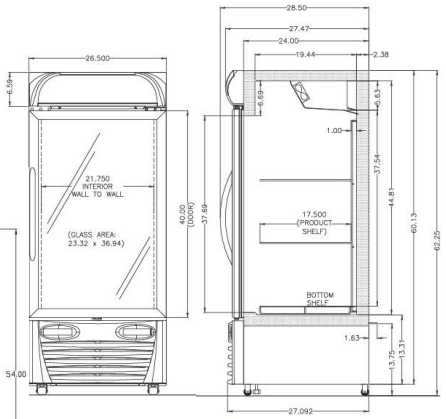

GDF-9M

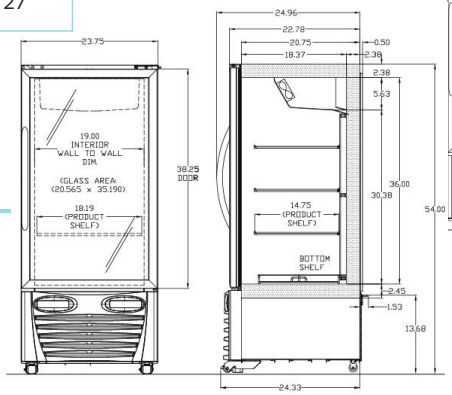

GDF-43

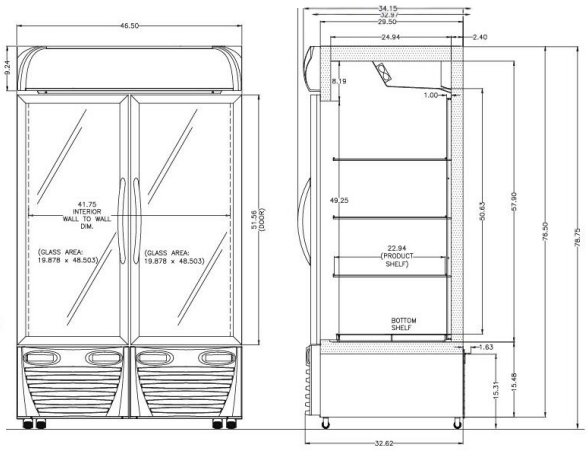

GDF-15

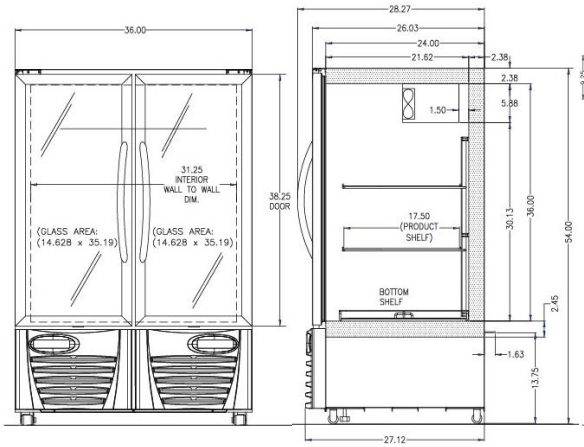

GDF-22

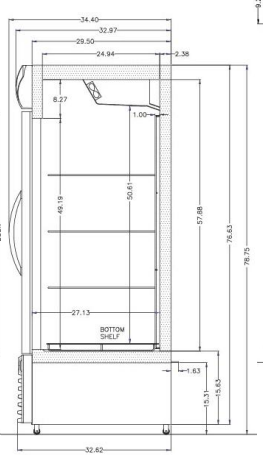

NOTE: Dimensions are in inches.
NOTE: Dimensions are all nominal lengths, use final spec sheet for exact data and model availability.
NOTE: Shipping weight does not include weight of pallets when needed.
NOTE: These merchandisers are designed for use in stores where temperature and humidity do not exceed listed operating conditions.
NOTE: We reserve the right to change specifications and product design without notice

Excellence Industries

Profit from the Power of Partnership.



GDR

GLASS DOOR COOLER

KEY FEATURES

- LED lighting
- Self closing door
- Forced air refrigeration
- 10.25-foot cord
- Environmentally friendly hydrocarbon refrigerant
- Temperature range of +32° to +35°F

ADVANTAGES

- Compact footprint for easy placement
- Adjustable shelves to support changing planograms



GDR-12HC

DOE LISTED

Complies with 2017 DOE standards for commercial cooler

1950 Joe McIntosh Rd
Plant City, FL 33565
800.441.4014 | 813.870.0340
www.excellenceindustries.com



GDR GLASS DOOR COOLER

SPECIFICATIONS

Model	GDR-5HC	GDR-10HC	GDR-12HC
Cubic Feet	5.0	9.0	12.0
Approx. Weight (Net)	110 lb (50 kg)	176 lb (80 kg)	198 lb (90 kg)
Approx. Weight (Shipping)	119 lb (54 kg)	194 lb (88 kg)	217 lb (98 kg)
Running Amps	2.2	3.5	3.2
Compressor HP	1/5	1/2	1/2
Refrigerant	R-600a	R-290	R-290
No. of Shelves	3	4	5
No. of 12 oz Cans	96	252	294
No. of 20 oz Bottles	60	126	168
Container Quantity	152	72	72

NEMA 5-15P



115 / 60 / 1

AVAILABLE OPTIONS

- Graphics
- Etched door graphic for GDR-5HC

PRODUCT INFORMATION

Click or scan QR to access spec sheets and technical information

GDR SERIES

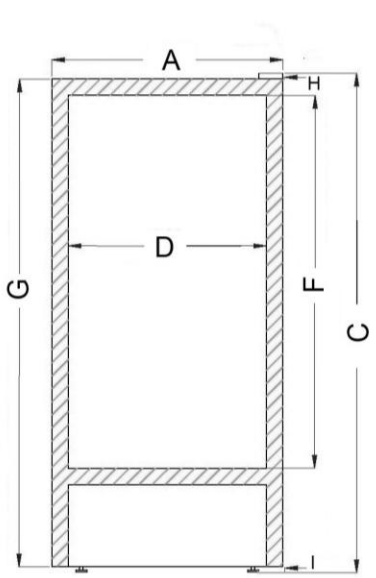

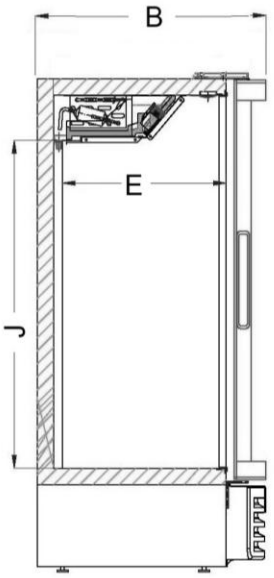

Model	A	B	C	D	E	F	G	H	I*	J
GDR-5HC	20”	20 1/2”	50 3/8”	16 5/8”	15 1/4“	33”	47 3/8”	0”	3”	26 7/8”
GDR-10HC	20”	24 1/4“	54 1/4”	21 3/8”	17 5/8”	40 3/8”	52 7/8”	3/4“	5/8”	35 3/8”
GDR-12HC	25”	24 1/4“	63 5/8”	21 3/8”	17 5/8”	49 3/4”	62 1/4“	3/4“	5/8”	44 7/8”

The GDR-5 has casters. The GDR-10 and GDR-12 have legs

NOTE: Dimensions are in inches.
NOTE: Dimensions are all nominal lengths, use final spec sheet for exact data and model availability.
NOTE: Shipping weight does not include weight of pallets when needed.
NOTE: These merchandisers are designed for use in stores where temperature and humidity do not exceed listed operating conditions.
NOTE: We reserve the right to change specifications and product design without notice

©November 18, 2026 Excellence Industries

Excellence Industries

Profit from the Power of Partnership.

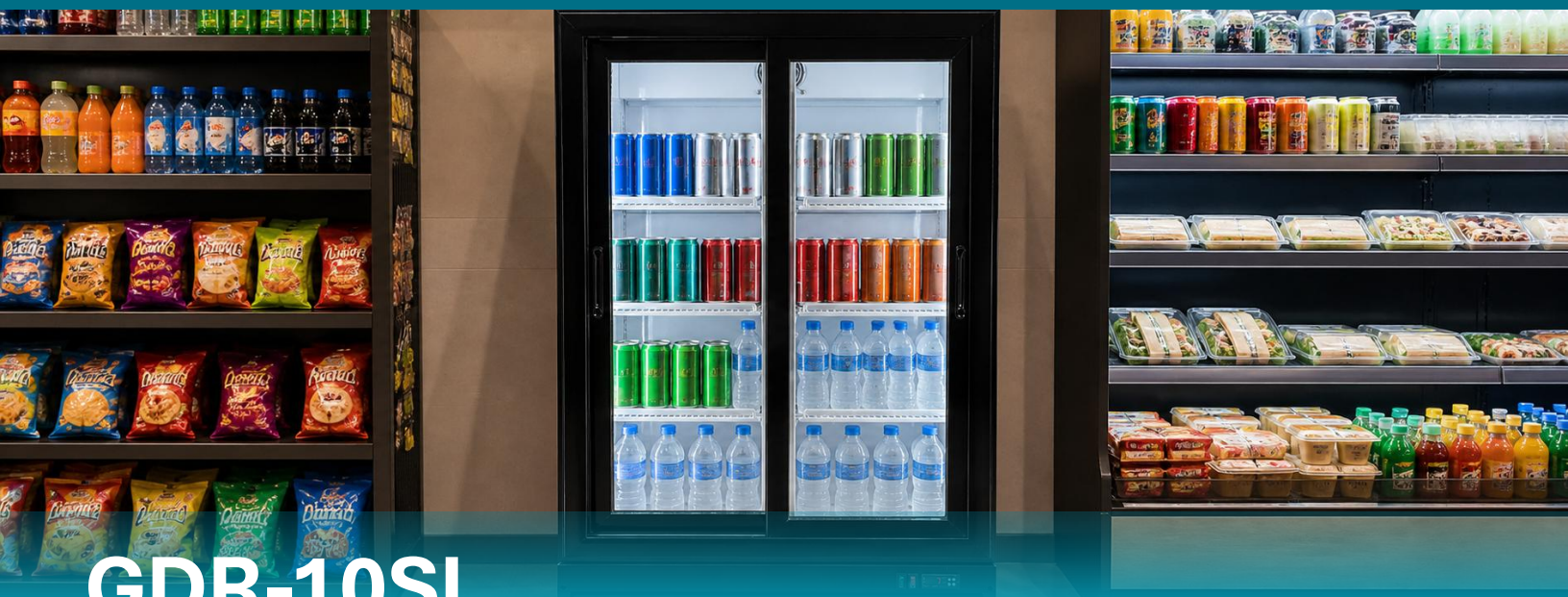

GDR-10SL

SLIM DOUBLE-DOOR COOLER

KEY FEATURES

- LED lighting
- Door lock and key
- Self closing door
- Forced air refrigeration
- Slim 19 7/16” depth
- 7.75-foot cord / 6.5-foot accessible cord
- Environmentally friendly R-600a refrigerant
- Temperature range of +32° to +41°F

ADVANTAGES

- Forced air cooling supports consistent cabinet temperature
- Self-closing doors helps retain cold air
- Lighted sign and LED lighting support product visibility
- Narrow footprint for placement in tight locations



GDR-10SL

DOE LISTED

Complies with 2017 DOE standards for commercial cooler

1950 Joe McIntosh Rd
Plant City, FL 33565
800.441.4014 | 813.870.0340
www.excellenceindustries.com



GDR-10SL SLIM DOUBLE-DOOR COOLER

SPECIFICATIONS

Model	GDR-10SL
Cubic Feet	10.1
Approx. Weight (Net)	194 lb (88 kg)
Approx. Weight (Shipping)	220 lb (100 kg)
Running Amps	1.6
Compressor HP	1/5
Container Quantity	64

NEMA 5-15P



115 / 60 / 1

AVAILABLE OPTIONS

- Graphics
- Organizer shelves

PRODUCT INFORMATION

Click or scan QR to access spec sheets and technical information

GDR-10SL

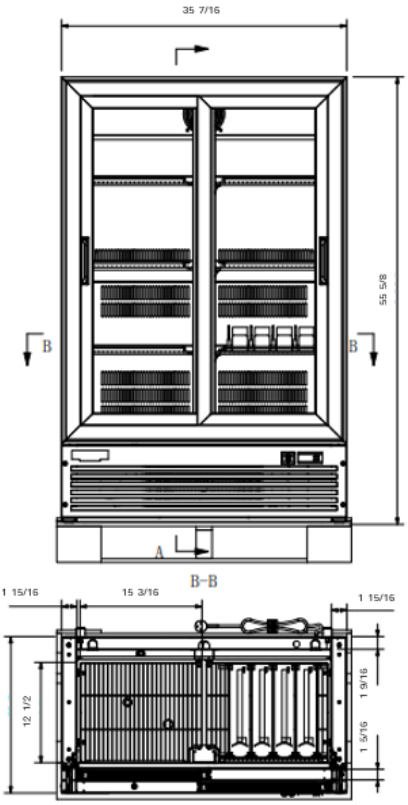

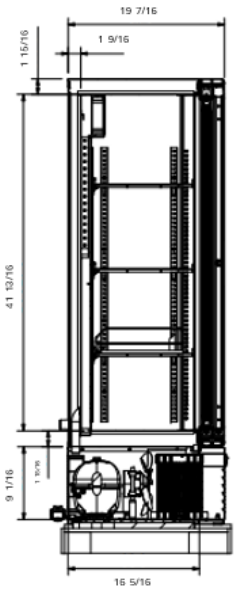

NOTE: Dimensions are in inches.
NOTE: Dimensions are all nominal lengths, use final spec sheet for exact data and model availability.
NOTE: Shipping weight does not include weight of pallets when needed.
NOTE: These merchandisers are designed for use in stores where temperature and humidity do not exceed listed operating conditions.
NOTE: We reserve the right to change specifications and product design without notice

©November 18, 2026 Excellence Industries

Excellence Industries

Profit from the Power of Partnership.



GDR-13SL

DOUBLE DOOR COOLER

KEY FEATURES

- Self closing sliding doors
- Enhanced LED lighting
- Adjustable shelves
- Forced air refrigeration
- Energy efficient
- 10-foot cord
- Environmentally friendly R-290 refrigerant
- Temperature range of +32°F to +41°F

ADVANTAGES

- Sliding-door format supports tight aisles and compact placements
- Pull-out compartment simplifies service access
- Adjustable shelves support changing beverage planograms



GDR-13SL

DOE LISTED

Complies with 2017 DOE standards for commercial cooler

1950 Joe McIntosh Rd
Plant City, FL 33565
800.441.4014 | 813.870.0340
www.excellenceindustries.com



GDR-13SL DOUBLE DOOR COOLER

SPECIFICATIONS

Model	GDR-13SL
Cubic Feet	13.1
Approx. Weight (Net)	275 lb (125 kg)
Approx. Weight (Shipping)	318 lb (144 kg)
Running Amps	3.1
Compressor HP	1/4
20 oz Bottles (Flat Shelf)	210
20 oz Bottles per Flat Shelf	35
20 oz Bottles (Organizer Shelf)	180
20 oz Bottles per Org Shelf	30

NEMA 5-15P



115 / 60 / 1

PRODUCT INFORMATION

Click or scan QR to access spec sheets and technical information

AVAILABLE OPTIONS

- Graphics
- Organizer shelves

GDR-13SL

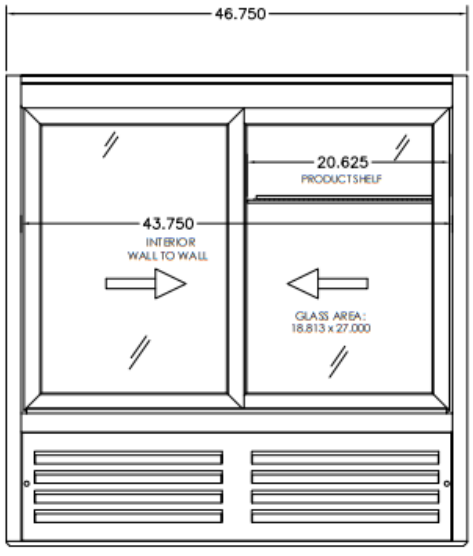

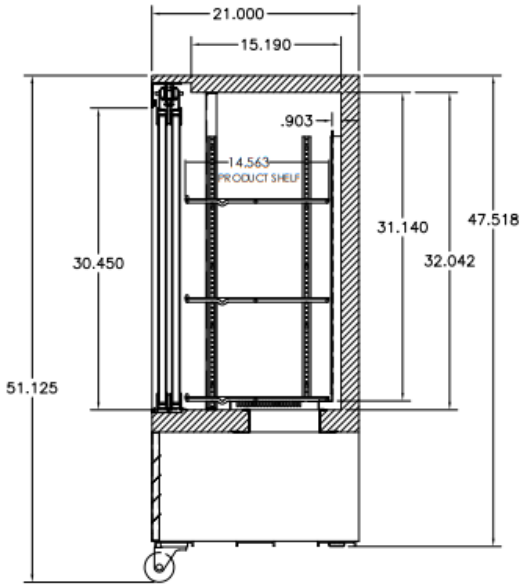

NOTE: Dimensions are in inches.
NOTE: Dimensions are all nominal lengths, use final spec sheet for exact data and model availability.
NOTE: Shipping weight does not include weight of pallets when needed.
NOTE: These merchandisers are designed for use in stores where temperature and humidity do not exceed listed operating conditions.
NOTE: We reserve the right to change specifications and product design without notice

©November 18, 2026 Excellence Industries

Excellence Industries

Profit from the Power of Partnership.



GDR-14P

DOUBLE DOOR COOLER

KEY FEATURES

- LED lighting
- Lighted door sign
- Self closing door
- Forced air refrigeration
- 10-foot cord
- Environmentally friendly R-290 refrigerant
- Temperature range of +32° to +41°F

ADVANTAGES

- Forced air cooling supports consistent cabinet temperature
- Self-closing door helps retain cold air
- Lighted sign and LED lighting support product visibility



GDR-14P

DOE LISTED

Complies with 2017 DOE standards for commercial cooler

1950 Joe McIntosh Rd
Plant City, FL 33565
800.441.4014 | 813.870.0340
www.excellenceindustries.com



GDR-14P DOUBLE DOOR COOLER

SPECIFICATIONS

Model	GDR-14P
Cubic Feet	15.55
Approx. Weight (Net)	312 lb (142 kg)
Approx. Weight (Shipping)	332 lb (151 kg)
Running Amps	3.1
Compressor HP	3/4
20 oz Bottles (Flat Shelf)	220
20 oz Bottles per Flat Shelf	55
20 oz Bottles (Organizer Shelf)	200
20 oz Bottles per Org Shelf	50
Container Quantity	32

NEMA 5-15P



115 / 60 / 1

AVAILABLE OPTIONS

- Graphics
- Organizer shelves

PRODUCT INFORMATION

Click or scan QR to access spec sheets and technical information

GDR-14P

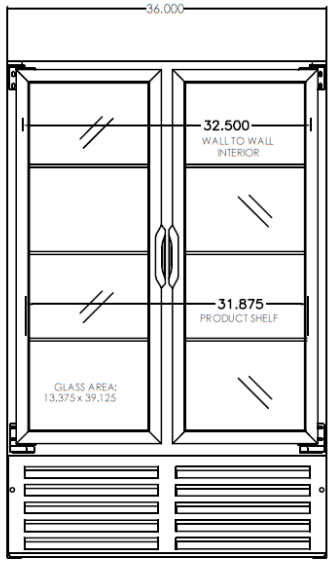

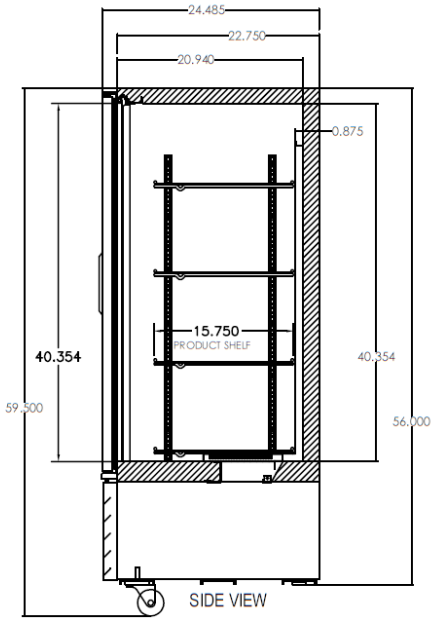

NOTE: Dimensions are in inches.
NOTE: Dimensions are all nominal lengths, use final spec sheet for exact data and model availability.
NOTE: Shipping weight does not include weight of pallets when needed.
NOTE: These merchandisers are designed for use in stores where temperature and humidity do not exceed listed operating conditions.
NOTE: We reserve the right to change specifications and product design without notice

©November 18, 2026 Excellence Industries

Excellence Industries

Profit from the Power of Partnership.



NG

FULL GLASS DOOR COOLER

KEY FEATURES

- Double pane glass doors
- Forced air refrigeration
- Electronic controller
- Adjustable shelves
- High luminosity LED lighting
- 10-foot cord / 9-foot accessible cord
- Environmentally friendly hydrocarbon refrigerant

ADVANTAGES

- Self-closing doors help maintain cabinet temperature
- White interior helps labels stand out under LED lighting
- Full front glass for more merchandising space and a better overall look



NG-50

DOE LISTED

Complies with 2017 DOE standards
for commercial refrigerator and freezer with doors

1950 Joe McIntosh Rd
Plant City, FL 33565
800.441.4014 | 813.870.0340
www.excellenceindustries.com

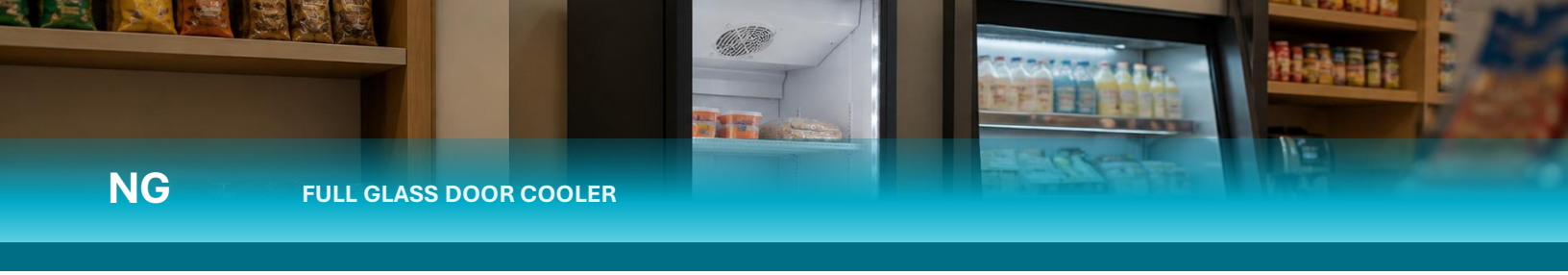

NG

FULL GLASS DOOR COOLER

SPECIFICATIONS

Model	NG-11	NG-13	NG-27	NG-44	NG-50
Cubic Feet	9.5	11.7	21.9	43.3	50.3
Net Weight	185 lb (84 kg)	198 lb (90 kg)	291 lb (132 kg)	415 lb (188 kg)	466 lb (211 kg)
Shipping Weight	199 lb (90 kg)	212 lb (96 kg)	311 lb (141 kg)	430 lb (195 kg)	481 lb (218 kg)
Running Amps	3	3	3.5	6	7
Compressor HP	1/8	1/8	1/3	1/3	1/2
Refrigerant	R-600a	R-600a	R-290	R-290	R-290
Temperature	+32°F to +45°F	+32°F to 45°F	+36°F to +39°F	+32°F to +45°F	+34°F to +43°F
Capacity of 20 oz PET	140	182	387	602	688
Container Quantity	69	69	57	24	22

NEMA 5-15P



115 / 60 / 1

AVAILABLE OPTIONS

- Castors
- Door lock
- Custom graphics

PRODUCT INFORMATION

Click or scan QR to access spec sheets and technical information

NG SERIES

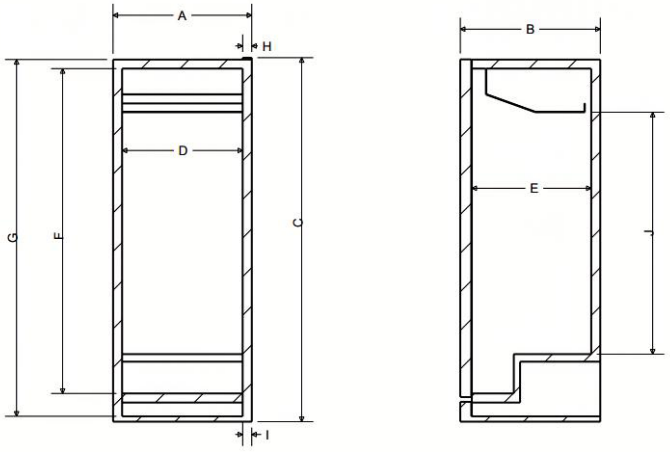

Model	A	B	C	D	E	F	G	H	I	J
NG-11	24.9”	22.8”	54.3”	20.9”	18.9”	45.9”	52.9”	2.0”	1.5”	32”
NG-13	24.9”	22.8”	63.1”	20.9”	18.9”	54.6”	61.5”	2.0”	1.5”	42”
NG-27	30”	30.1”	78.6”	26.1”	25.8”	70.3”	77.2”	2.0”	1.5”	54.1”
NG-44	47.1”	29.8”	79.3”	43.2”	26.1”	70.9”	77.8”	2.0”	1.5”	55”
NG-50	54.1”	29.8”	79.3”	50.2”	26.1”	70.9”	77.8”	2.0”	1.5”	55”

NOTE: Dimensions are in inches.
NOTE: Dimensions are all nominal lengths, use final spec sheet for exact data and model availability.
NOTE: Shipping weight does not include weight of pallets when needed.
NOTE: These merchandisers are designed for use in stores where temperature and humidity do not exceed listed operating conditions.
NOTE: We reserve the right to change specifications and product design without notice

©November 18, 2026 Excellence Industries

Excellence Industries

Profit from the Power of Partnership.



OMNIVIEW

ISLAND MERCHANDISER

KEY FEATURES

- LED lighting
- Double glazed doors
- Environmentally friendly R-290 refrigerant
- Temperature range of +32°F to +36°F

ADVANTAGES

- Creates an optimal 360° view and accessibility
- Get more merchandising while taking up less floor space



OMNIVIEW-10

1950 Joe McIntosh Rd
Plant City, FL 33565
800.441.4014 | 813.870.0340
www.excellenceindustries.com



OMNIVIEW ISLAND MERHANDISER

SPECIFICATIONS

Model	OMNIVIEW-6	OMNIVIEW-8	OMNIVIEW-10
Cubic Feet	23.73	78.4	104.53
Approx. Weight (Net)	TBD	TBD	TBD
Approx. Weight (Shipping)	TBD	TBD	TBD
Running Amps	2.52	5.24	5.35
Compressor HP	3/8	3/4	3/4
Container Quantity	6	4	3

NEMA 6-15P



208 / 60 / 1

AVAILABLE OPTIONS

PRODUCT INFORMATION

Click or scan QR to access spec sheets and technical information

OMNIVIEW SIDEVIEW

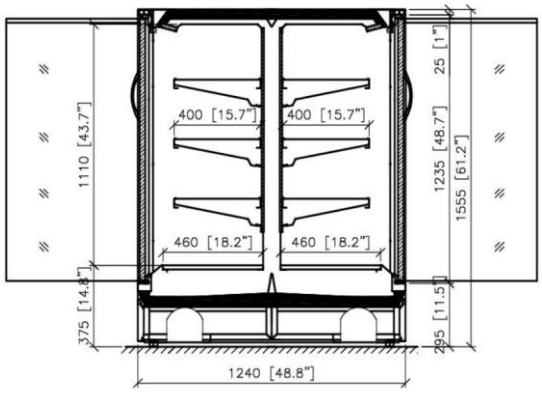

OMNIVIEW-6

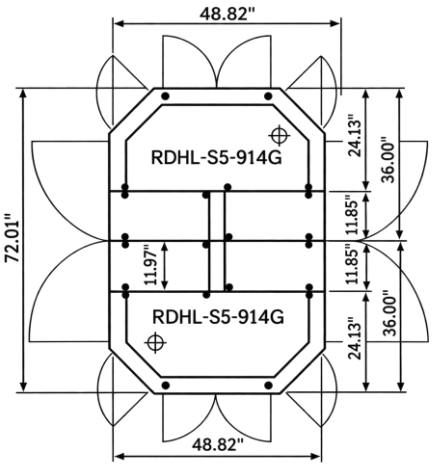

OMNIVIEW-8

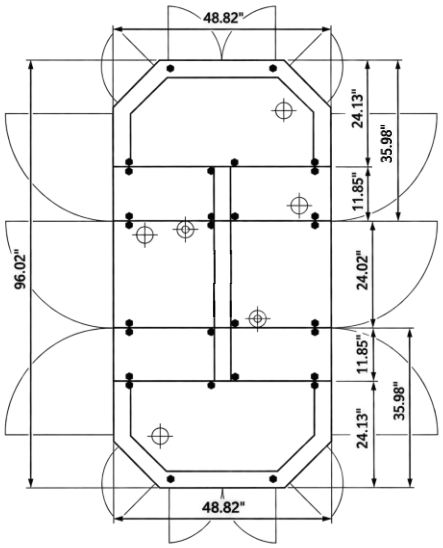

OMNIVIEW-10

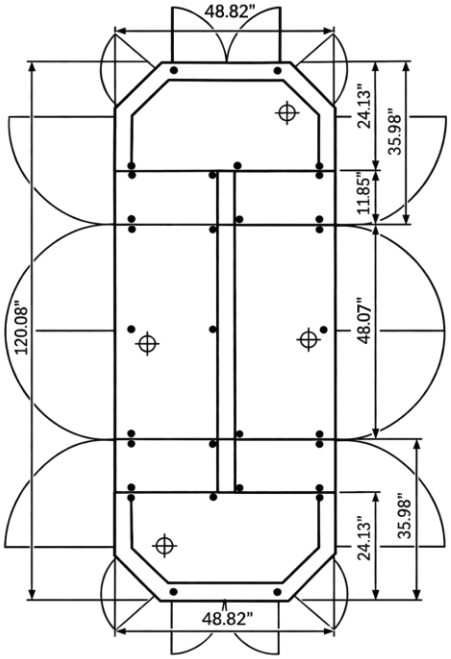

NOTE: Dimensions are in inches.
NOTE: Dimensions are all nominal lengths, use final spec sheet for exact data and model availability.
NOTE: Shipping weight does not include weight of pallets when needed.
NOTE: These merchandisers are designed for use in stores where temperature and humidity do not exceed listed operating conditions.
NOTE: We reserve the right to change specifications and product design without notice

©November 18, 2026 Excellence Industries

Excellence Industries

Excellence Industries

Profit from the Power of Partnership.



PANORAMIC

MULTIDECKS

KEY FEATURES

- Fully transparent glass door and end wall
- Digital thermostat
- LED light on each shelf
- 6.5-foot cord
- Environmentally friendly R-290 refrigerant
- Temperature range of +30°F to +41°F

ADVANTAGES

- Space saving design for small footprint
- Euro style glass doors enhance overall appeal
- Sold in sections to create your own line up



VFC-ID125

DOE LISTED

Complies with 2017 DOE standards for commercial cooler

1950 Joe McIntosh Rd
Plant City, FL 33565
800.441.4014 | 813.870.0340
www.excellenceindustries.com

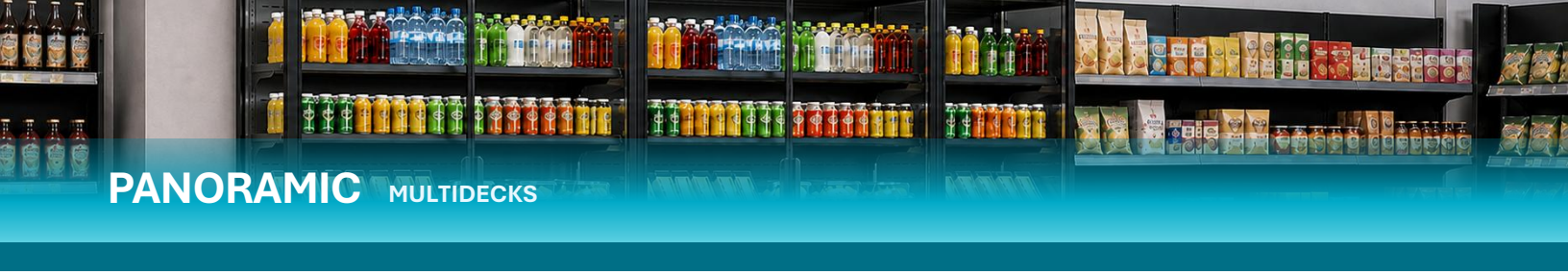

PANORAMIC MULTIDECKS

SPECIFICATIONS

Model	VFC-ID125	VFC-IT187	VFC-IF250
Cubic Feet	26.98	40.51	54
Net Weight	553 lb (251 kg)	735 lb (333 kg)	930 lb (422 kg)
Shipping Weight	661 lb (300 kg)	926 lb (420 kg)	1102 lb (500 kg)
Running Amps	3	4.1	4.5
Compressor HP	1/4	1/4	1/4
Shelves	5	5	5
Container Quantity	25	18	12

NEMA 5-15P



115 / 60 / 1

AVAILABLE OPTIONS

- Casters
- Solid end wall

DIY COMBINATIONS



Units are multiplexable:
VFC-ID125: 50 3/8” with one side removed
49 1/4” with both sides removed
VFC-IT187: 75” with one side removed
73 13/16” with both sides removed
VFC-IF250: 99 5/8” with one side removed
98 7/16” with both sides removed

PRODUCT INFORMATION

Click or scan QR to access spec sheets and technical information

VFC-ID125



VFC-IT187

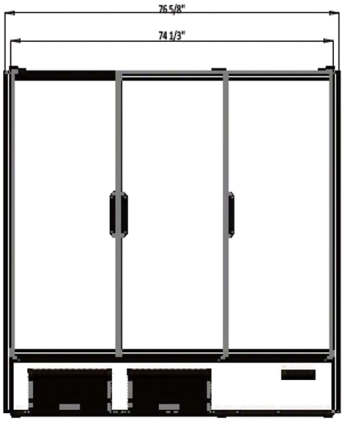

VFC-IF250

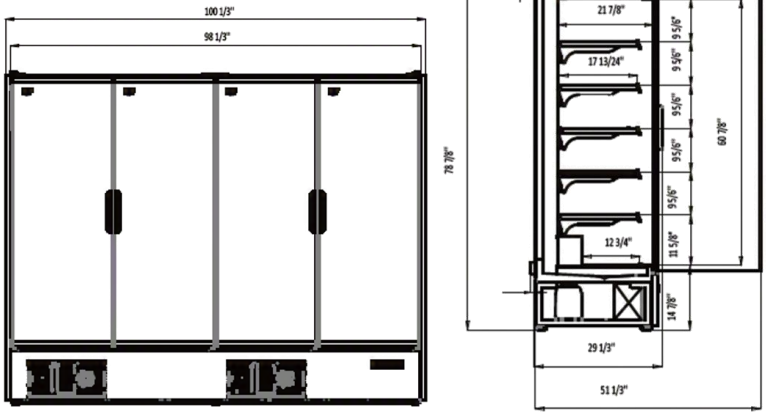

NOTE: Dimensions are in inches.
NOTE: Dimensions are all nominal lengths, use final spec sheet for exact data and model availability.
NOTE: Shipping weight does not include weight of pallets when needed.
NOTE: These merchandisers are designed for use in stores where temperature and humidity do not exceed listed operating conditions.
NOTE: We reserve the right to change specifications and product design without notice

©November 18, 2026 Excellence Industries

Excellence Industries

Profit from the Power of Partnership.



SLF

SLIM LINE ICE CREAM FREEZER

KEY FEATURES

- Fully insulated glass door with black trim
- Adjustable electronic thermostat
- Interior LED lighting
- Low maintenance condenser
- 6 shelves standard
- 10.75-foot cord / 9.75-foot accessible cord
- Environmentally friendly R-290 refrigerant
- Temperature range of -10°F to 0°F

ADVANTAGES

- Slim footprint fits in small areas
- Casters allow for easy relocation



SLF-7

DOE LISTED

Complies with 2017 DOE standards
for commercial freezer and commercial ice cream freezer

1950 Joe McIntosh Rd
Plant City, FL 33565
800.441.4014 | 813.870.0340
www.excellenceindustries.com



SLF

SLIM LINE ICE CREAM FREEZER

SPECIFICATIONS

Model	SLF-7
Cubic Feet	6.7
Approx. Weight (Net)	190 lb (86 kg)
Approx. Weight (Shipping)	209 lb (95 kg)
Running Amps	5.5
Compressor HP	1/3
No. of Shelves	6
Capacity of Pints	54
Container Quantity	76

NEMA 5-15P



115 / 60 / 1

AVAILABLE OPTIONS

- Pricing tags
- Pint shelves

PRODUCT INFORMATION

Click or scan QR to access spec sheets and technical information

SLF-7

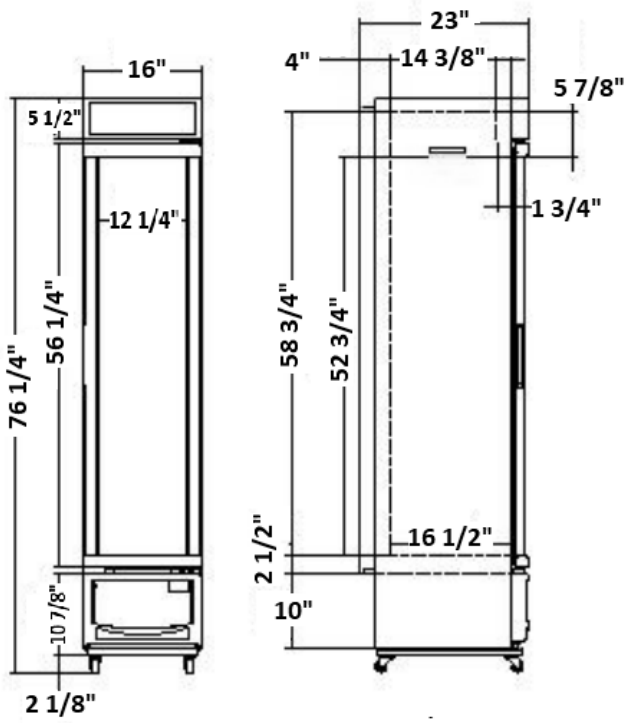

NOTE: Dimensions are in inches.
NOTE: Dimensions are all nominal lengths, use final spec sheet for exact data and model availability.
NOTE: Shipping weight does not include weight of pallets when needed.
NOTE: These merchandisers are designed for use in stores where temperature and humidity do not exceed listed operating conditions.
NOTE: We reserve the right to change specifications and product design without notice

©November 18, 2026 Excellence Industries

Excellence Industries

Excellence Industries

Profit from the Power of Partnership.



TKO

UPRIGHT GLASS DOOR COOLER

KEY FEATURES

- Self-closing door
- Slide out refrigeration system
- Interior vertical LED light
- Wheels with front brake
- Sliding glass doors (TKO-41)
- 6.75-foot cord
- Environmentally friendly R-290 refrigerant
- Temperature range of +32°F to +39°F

ADVANTAGES

- Triple-pane heated glass provides clear display visibility
- Stainless steel bottom plate is pre-coated aluminum interior for longer life
- Casters standard to allow for easy redeployment



TKO-24

DOE LISTED

Complies with 2017 DOE standards
for self-contained refrigerators with doors

1950 Joe McIntosh Rd
Plant City, FL 33565
800.441.4014 | 813.870.0340
www.excellenceindustries.com



TKO

UPRIGHT GLASS DOOR COOLER

SPECIFICATIONS

Model	TKO-21	TKO-24	TKO-41	TKO-42	TKO-62
Cubic Feet	21.4	24.1	40.6	41.6	61.8
Approx. Weight (Net)	265 lb (kg)	278 lb (kg)	463 lb (kg)	441 lb (kg)	620 lb (281 kg)
Approx. Weight (Shipping)	309 lb (kg)	322 lb (kg)	538 lb (kg)	516 lb (kg)	665 lb (302 kg)
Running Amps	4.8	4.8	8.0	8.0	9.5
Compressor HP	1/5	1/4	1/3	1/2	1/2
No. of 12 oz Cans	576	648	1296	1296	1900
No. of Shelves	4	4	8	8	12
Container Quantity	43	30	21	21	13

NEMA 5-15P



115 / 60 / 1

AVAILABLE OPTIONS

- Organizer shelves
- Graphics
- Adjustable legs
- Price tag
- Extra shelves

PRODUCT INFORMATION

Click or scan QR to access spec sheets and technical information

TKO-21 / TKO-24 TKO-42 / TKO-62

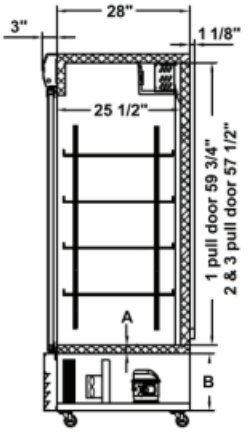

TKO-41

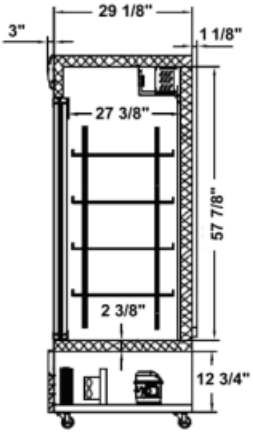

TKO-21 / TKO-24

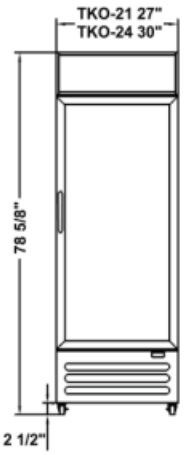

TKO-41 / TKO-42



TKO-62

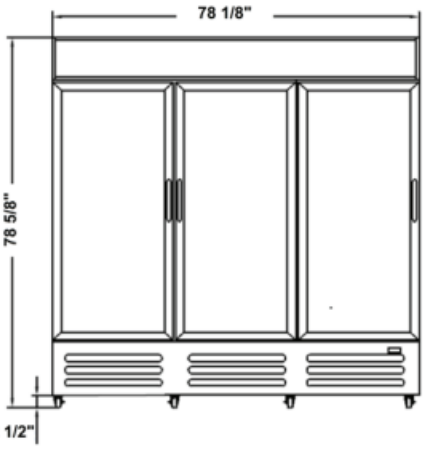

NOTE: Dimensions are in inches.
NOTE: Dimensions are all nominal lengths, use final spec sheet for exact data and model availability.
NOTE: Shipping weight does not include weight of pallets when needed.
NOTE: These merchandisers are designed for use in stores where temperature and humidity do not exceed listed operating conditions.
NOTE: We reserve the right to change specifications and product design without notice

©November 18, 2026 Excellence Industries

Excellence Industries

Excellence Industries

Profit from the Power of Partnership.



Including the Panoramic

TKOF

UPRIGHT GLASS DOOR FREEZER

KEY FEATURES

- Fan cooling
- Triple-pane double-tempered glass with heat film
- Digital Carel controller
- Interior vertical LED light
- 6.75-foot cord
- Environmentally friendly R-290 refrigerant
- Temperature range of 0°F to +25°F

ADVANTAGES

- Triple-pane heated glass provides clear display visibility
- Stainless steel bottom plate are pre-coated aluminum interior for longer life
- Casters standard to allow for easy redeployment



TKOF-42

DOE LISTED

Complies with 2017 DOE standards for commercial freezer

1950 Joe McIntosh Rd
Plant City, FL 33565
800.441.4014 | 813.870.0340
www.excellenceindustries.com



TKOF

UPRIGHT GLASS DOOR FREEZER

SPECIFICATIONS

Model	TKOF-21	TKOF-42	TKOF-62
Cubic Feet	18.9	41.9	62.3
Net Weight	271 lb (123 kg)	485 lb (220 kg)	653 lb (296 kg)
Gross Weight	304 lb (138 kg)	529 lb (240 kg)	723 lb (328 kg)
Running Amps	6.8	12.5	15.9
Compressor HP	3/4	3/4	1
Shelves	4	8	12
Container Quantity	43	21	13

NEMA 5-15P



115 / 60 / 1

PRODUCT INFORMATION

Click or scan QR to access spec sheets and technical information

AVAILABLE OPTIONS

- Optional price tags
- Optional lock and key
- Graphics

TKOF-21

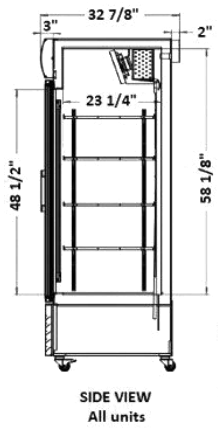

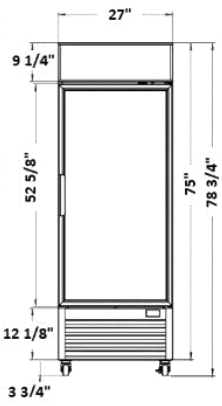

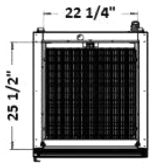

TKOF-42

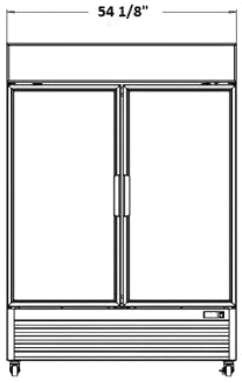

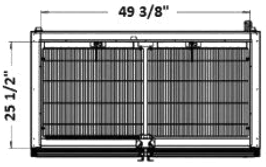

TKOF-62

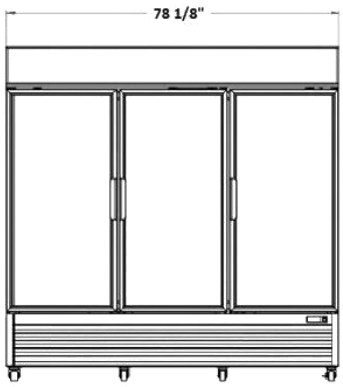

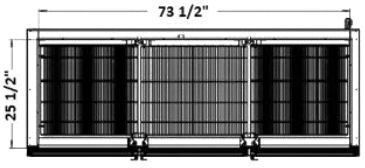

NOTE: Dimensions are in inches.
NOTE: Dimensions are all nominal lengths, use final spec sheet for exact data and model availability.
NOTE: Shipping weight does not include weight of pallets when needed.
NOTE: These merchandisers are designed for use in stores where temperature and humidity do not exceed listed operating conditions.
NOTE: We reserve the right to change specifications and product design without notice

©November 18, 2026 Excellence Industries

Excellence Industries

Excellence Industries

Profit from the Power of Partnership.



VF

Including the Panoramic

HEAVY DUTY UPRIGHT FREEZER

KEY FEATURES

- Low maintenance condenser
- Adjustable temperature
- Double paned glass
- Interior LED light
- 6-foot cord
- Environmentally friendly R-290 refrigerant
- Temperature range of -15°F to +25°F

ADVANTAGES

- Designed for heavy duty upright freezer applications
- Adjustable shelves for changing planograms
- Lower maintenance time and costs
- Units can handle frozen food or ice cream



VF-23HC

DOE LISTED

Complies with 2017 DOE standards
for commercial freezer and ice cream freezer

1950 Joe McIntosh Rd
Plant City, FL 33565
800.441.4014 | 813.870.0340
www.excellenceindustries.com



VF

HEAVY DUTY UPRIGHT FREEZER

SPECIFICATIONS

Model	VF-8HC	VF-12HC	VF-23HC
Cubic Feet	8	12	24
Approx. Weight (Net)	154 lb (70 kg)	192 lb (87 kg)	364 lb (165 kg)
Approx. Weight (Shipping)	165 lb (75 kg)	214 lb (97 kg)	375 lb (170 kg)
Running Amps	3.5	3.4	6.7
Compressor HP	1/3	1/3	1/2
No. of Shelves	3	4	4
Container Quantity	60	54	42

NEMA 5-15P



115 / 60 / 1

PRODUCT INFORMATION

Click or scan QR to access spec sheets and technical information

AVAILABLE OPTIONS

- Graphics
- Extra shelves
- Casters

VF-8 SERIES

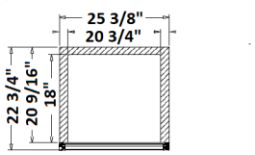

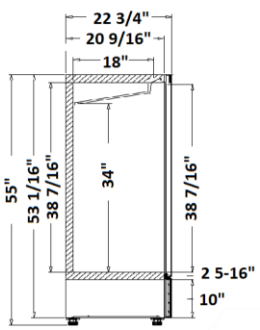

VF-12 SERIES

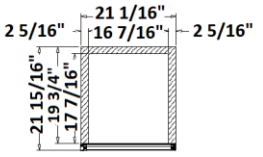

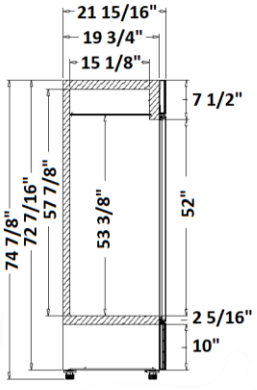

VF-23 SERIES

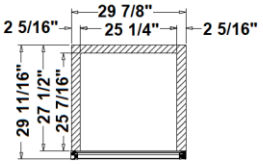

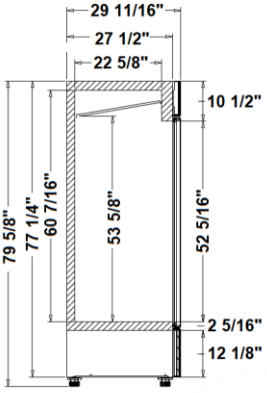

NOTE: Dimensions are in inches.
NOTE: Dimensions are all nominal lengths, use final spec sheet for exact data and model availability.
NOTE: Shipping weight does not include weight of pallets when needed.
NOTE: These merchandisers are designed for use in stores where temperature and humidity do not exceed listed operating conditions.
NOTE: We reserve the right to change specifications and product design without notice

Excellence Industries

Profit from the Power of Partnership.



VR

HEAVY DUTY UPRIGHT COOLER

KEY FEATURES

- Low maintenance condenser
- Adjustable temperature
- Double paned glass
- Interior LED light
- Sliding glass doors (VR-45SLD only)
- 6-foot cord
- Environmentally friendly R-290 refrigerant
- Temperature range of +32° to +39°F

ADVANTAGES

- Designed for heavy duty upright cooler applications
- Adjustable shelves for changing planograms
- Lower maintenance time and costs



VR-10

DOE LISTED

Complies with 2017 DOE standards for commercial cooler

1950 Joe McIntosh Rd
Plant City, FL 33565
800.441.4014 | 813.870.0340
www.excellenceindustries.com



VR

HEAVY DUTY UPRIGHT COOLER

SPECIFICATIONS

Model	VR-10HC	VR-12HC	VR-26HC	VR-45SLD
Cubic Feet	10	12	26	45
Approx. Weight (Net)	173 lb (78 kg)	191 lb (87 kg)	308 lb (140 kg)	502 lb (228 kg)
Approx. Weight (Shipping)	193 lb (88 kg)	211 lb (96 kg)	333 lb (151 kg)	537 lb (244 kg)
Running Amps	3.7	4.2	6.5	11.8
Compressor HP	1/5	1/4	1/3	1/2
No. of 12 oz Cans	288	384	890	1260
No. of 20 oz Bottles	126	168	355	560
No. of Shelves	3	4	4	10
Container Quantity	72	72	45	27

NEMA 5-15P



115 / 60 / 1

AVAILABLE OPTIONS

- Organizer shelves
- Door lock system
- Casters
- Graphics

PRODUCT INFORMATION

Click or scan QR to access spec sheets and technical information

VR-10HC

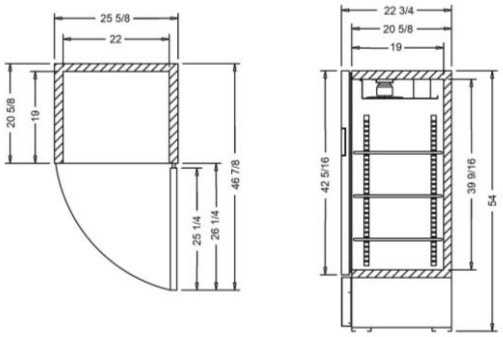

VR-12HC

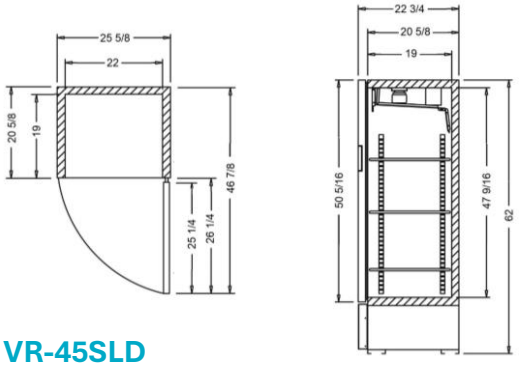

VR-26HC

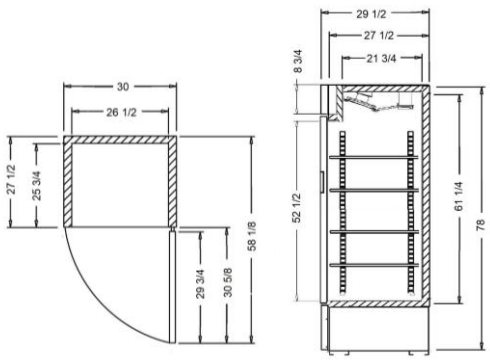

VR-45SLD

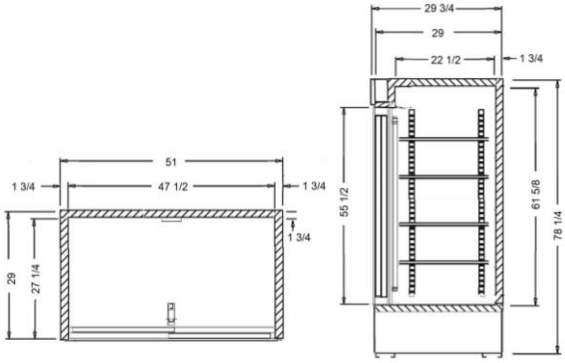

NOTE: Dimensions are in inches.
NOTE: Dimensions are all nominal lengths, use final spec sheet for exact data and model availability.
NOTE: Shipping weight does not include weight of pallets when needed.
NOTE: These merchandisers are designed for use in stores where temperature and humidity do not exceed listed operating conditions.
NOTE: We reserve the right to change specifications and product design without notice

c UL us LISTED

UL CERTIFIED SANITATION

©November 18, 2026 Excellence Industries

Excellence Industries

Open Air Display

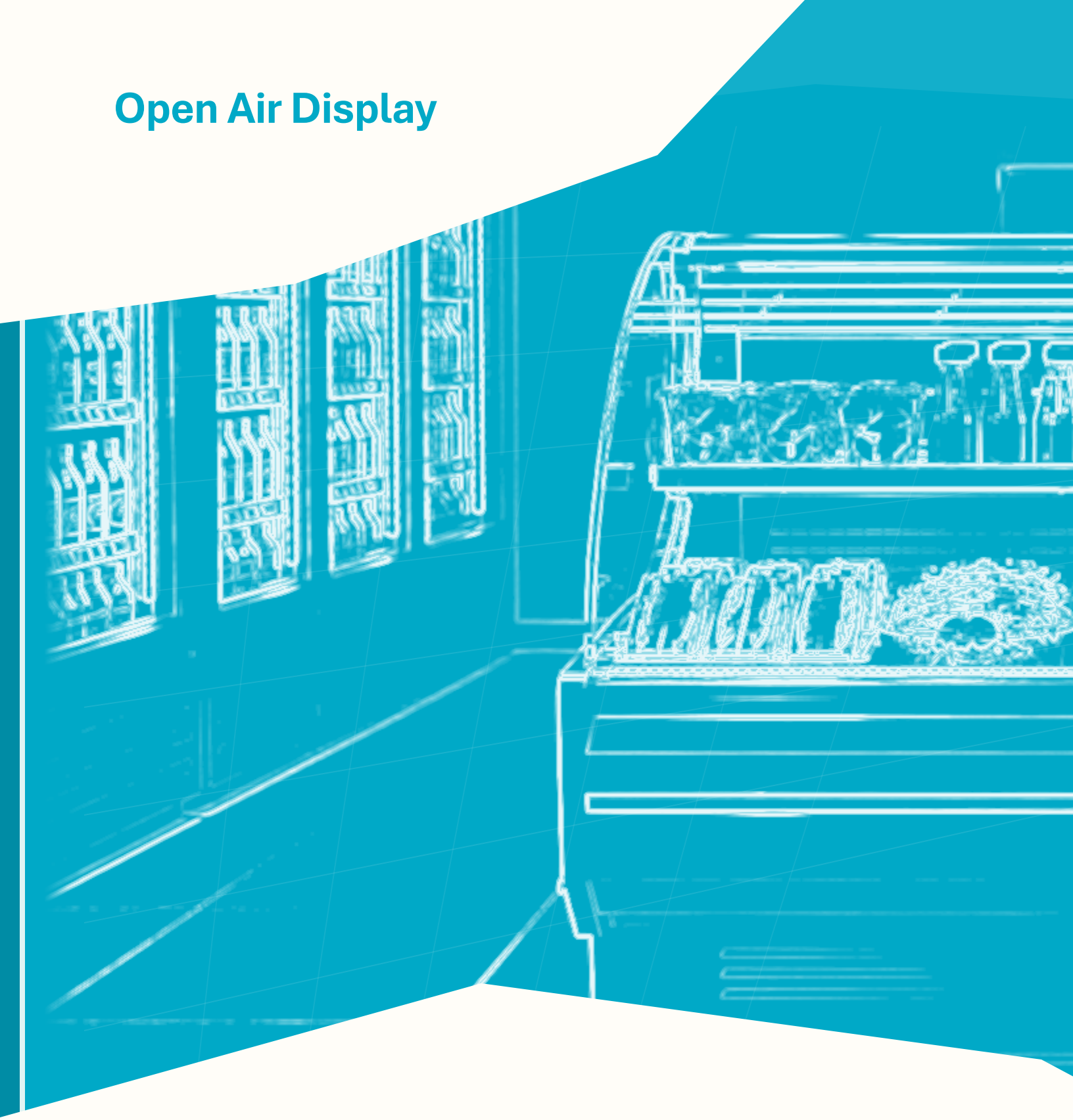

AC	72	KAC	78
ACS	74	KOF	80
IDA	76	TDAL	82



Excellence Industries

Profit from the Power of Partnership.



AC

AIR CURTAIN DISPLAY COOLER

KEY FEATURES

- Pull out compressor compartment
- Electronic thermostat
- Price tag molding
- Night blind
- Interior LED lighting
- 6.5-foot cord
- Environmentally friendly R-290 refrigerant
- Temperature range of +32°F to +41°F

ADVANTAGES

- Air curtain display for easy grab and go
- Easy maintenance and service
- Open-front refrigerated merchandising
- Small footprint for easy placement



AC-6HC

DOE LISTED

Complies with 2017 DOE standards
for commercial cooler without door

1950 Joe McIntosh Rd
Plant City, FL 33565
800.441.4014 | 813.870.0340
www.excellenceindustries.com



AC

AIR CURTAIN DISPLAY COOLER

SPECIFICATIONS

Model	AC-6HC
Cubic Feet	6.0
Approx. Weight (Net)	297 lb (135 kg)
Approx. Weight (Shipping)	364 lb (165 kg)
Running Amps	8.0
Compressor HP	1/2
Container Quantity	42

NEMA 5-15P



115 / 60 / 1

PRODUCT INFORMATION

Click or scan QR to access spec sheets and technical information

AVAILABLE OPTIONS

- Extra shelves
- Graphics
- Casters with 2 locking

AC-6HC

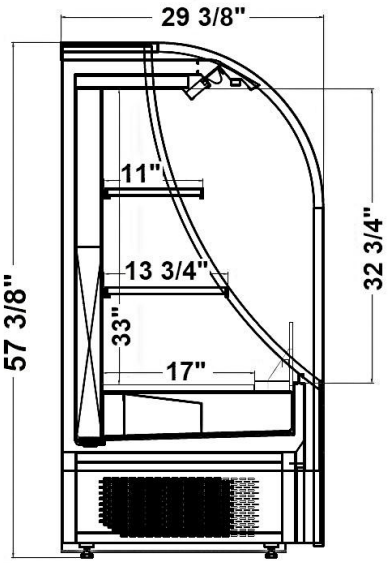

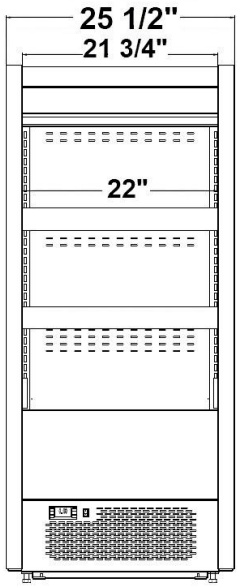

NOTE: Dimensions are in inches.
NOTE: Dimensions are all nominal lengths, use final spec sheet for exact data and model availability.
NOTE: Shipping weight does not include weight of pallets when needed.
NOTE: These merchandisers are designed for use in stores where temperature and humidity do not exceed listed operating conditions.
NOTE: We reserve the right to change specifications and product design without notice

©November 18, 2026 Excellence Industries

Excellence Industries

Excellence Industries

Profit from the Power of Partnership.



ACS

AIR CURTAIN DISPLAY COOLER

KEY FEATURES

- Electronic thermostat
- Feet on back and caster on front
- 2 vertical LED lights
- Lighted sign
- Night curtain
- 6.5-foot cord
- Environmentally friendly R-290 refrigerant
- Temperature range of +36°F to +45°F

ADVANTAGES

- Air curtain display for easy grab and go
- Plug-in design simplifies placement and operation
- Compact footprint fits easily into high-traffic shopping areas



ACS-3HC

DOE LISTED

Complies with 2017 DOE standards for commercial cooler without door

1950 Joe McIntosh Rd
Plant City, FL 33565
800.441.4014 | 813.870.0340
www.excellenceindustries.com



ACS

AIR CURTAIN DISPLAY COOLER

SPECIFICATIONS

Model	ACS-2HC	ACS-3HC
Cubic Feet	2.2	4.7
Approx. Weight (Net)	154 lb (70 kg)	165 lb (75 kg)
Approx. Weight (Shipping)	165 lb (75 kg)	176 lb (80 kg)
Running Amps	6.3	7.5
Compressor HP	1/3	1/2
Shelves	2	3
Capacity of 330ml Cans	144	192
Container Quantity	84	84

NEMA 5-15P



115 / 60 / 1

AVAILABLE OPTIONS

- Extra shelves
- Graphics

PRODUCT INFORMATION

Click or scan QR to access spec sheets and technical information

ACS SERIES

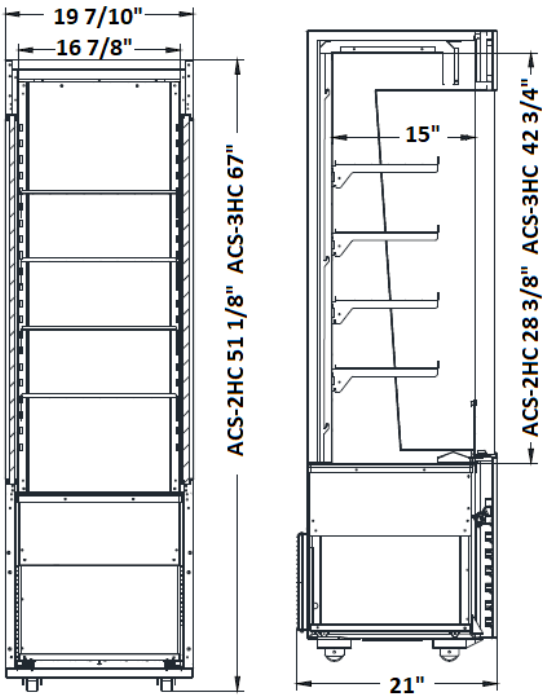

NOTE: Dimensions are in inches.
NOTE: Dimensions are all nominal lengths, use final spec sheet for exact data and model availability.
NOTE: Shipping weight does not include weight of pallets when needed.
NOTE: These merchandisers are designed for use in stores where temperature and humidity do not exceed listed operating conditions.
NOTE: We reserve the right to change specifications and product design without notice

©November 18, 2026 Excellence Industries

Excellence Industries

Excellence Industries

Profit from the Power of Partnership.



IDA

OPEN TOP MERCHANDISER

KEY FEATURES

- Panoramic end walls
- Anti-fog glass
- Uniform air distribution
- CFC-free polyurethane insulation
- Display can be either flat or tilted (IDA-8 only)
- 11.5-foot cord
- Environmentally friendly R-290 refrigerant
- Temperature range of +34°F to +40°F

ADVANTAGES

- Plug-in design simplifies placement and operation
- Compact footprint fits easily into high-traffic shopping areas
- Self-service layout makes grab-and-go shopping convenient
- Easy mobility supports flexible promotions and seasonal merchandising
- 360-degree visibility helps draw attention to impulse buys



IDA-4

DOE LISTED

Complies with 2017 DOE standards for commercial cooler

1950 Joe McIntosh Rd
Plant City, FL 33565
800.441.4014 | 813.870.0340
www.excellenceindustries.com



IDA OPEN TOP MERCHANDISER

SPECIFICATIONS

Model	IDA-3	IDA-4	IDA-8
Cubic Feet	2.8	3.9	8.1
Approx. Weight (Net)	205 lb (93 kg)	293 lb (133 kg)	326 lb (147 kg)
Approx. Weight (Shipping)	236 lb (107 kg)	333 lb (151 kg)	368 lb (167 kg)
Running Amps	3.6	3.8	4.1
Compressor HP	1/5	1/3	1/2
Display Space	4.4 sq ft	5.7 sq ft	12.6 sq ft
Container Quantity	44	36	18

NEMA 5-15P



115 / 60 / 1

AVAILABLE OPTIONS

- Stainless steel bumpers

PRODUCT INFORMATION

Click or scan QR to access spec sheets and technical information

IDA-3 / IDA-4

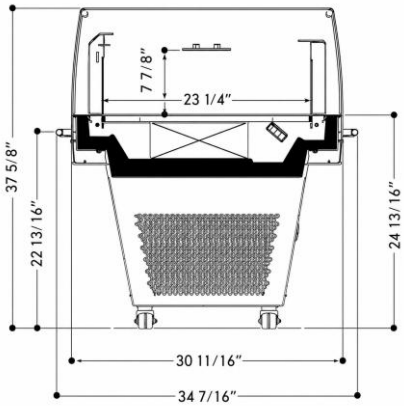

IDA-3 / IDA-4 / IDA-8

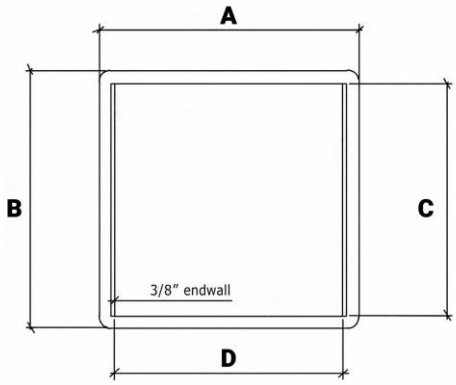

IDA-8

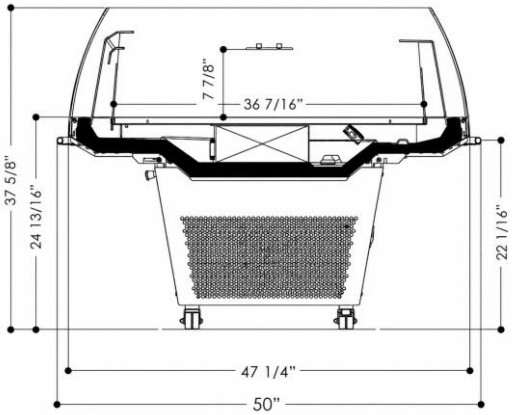

Model	A	B	C	D
IDA-3	32 1/16”	34 7/16”	30 11/16”	27 9/16”
IDA-4	39 15/16”	34 7/16”	30 11/16”	35 7/16”
IDA-8	53 3/4”	50”	47 1/4”	49 3/16”

All models shown above are measured with optional bumpers attached

NOTE: Dimensions are in inches.
NOTE: Dimensions are all nominal lengths, use final spec sheet for exact data and model availability.
NOTE: Shipping weight does not include weight of pallets when needed.
NOTE: These merchandisers are designed for use in stores where temperature and humidity do not exceed listed operating conditions.
NOTE: We reserve the right to change specifications and product design without notice

©November 18, 2026 Excellence Industries

Excellence Industries

Profit from the Power of Partnership.



KAC

OPEN AIR CHILLER

KEY FEATURES

- Slide-out air-cooled condensing unit
- Transparent air curtain
- LED light for every shelf
- Night curtain
- Automatic defrost
- Environmentally friendly R-290 refrigerant
- Temperature range of +30°F to +44°F

ADVANTAGES

- Open multideck format keeps packaged items easy to reach
- Narrow canopy and glass view end walls improve visibility
- Digital controller supports consistent operation
- Adjustable four-shelf layout supports merchandising changes



KAC-6

DOE LISTED

Complies with 2017 DOE standards for commercial cooler

1950 Joe McIntosh Rd
Plant City, FL 33565
800.441.4014 | 813.870.0340
www.excellenceindustries.com



KAC

OPEN AIR CHILLER

SPECIFICATIONS

Model	KAC-3S	KAC-4S	KAC-6S	KAC-3	KAC-4	KAC-6
Cubic Feet	13.9	18.6	27.9	17.3	23	34.6
Approx. Weight (Net)	390 lb (177kg)	511 lb (232kg)	694 lb (315kg)	412 lb (187kg)	564 lb (256kg)	734 lb (333kg)
Approx. Weight (Shipping)	507 lb (230kg)	650 lb (295kg)	791 lb (359kg)	529 lb (240kg)	675 lb (306kg)	948 lb (430kg)
Running Amps	14.3	19.3	16.3	14.8	19.3	16.3
Compressor HP	1	1 1/8	1 1/8 x 2	1	1 1/8	1 1/8 x 2
Cord Length	7.5 ft	7.5 ft	6.75 ft	7.5 ft	7.5 ft	6.75 ft
Container Quantity	33	25	16	28	22	14

KAC-3/3S	KAC-4/4S & KAC-6/6S
NEMA 5-20P	NEMA 5-30P
115 / 60 / 1 20 A Breaker Required	115 / 60 / 1 30 A Breaker Required

AVAILABLE OPTIONS

- Graphics
- Casters

PRODUCT INFORMATION

Click or scan QR to access spec sheets and technical information

KAC SERIES

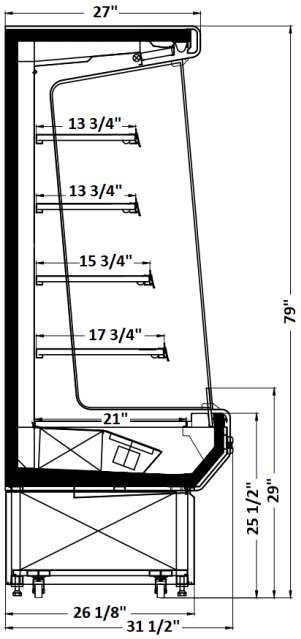

KAC-S SERIES

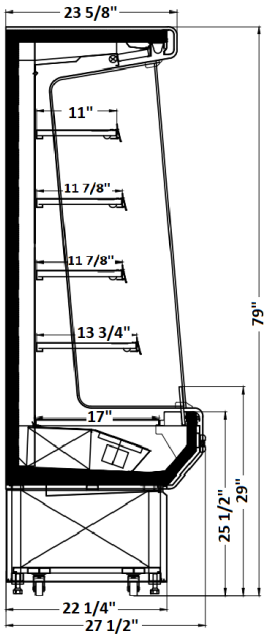

NOTE: Dimensions are in inches.
NOTE: Dimensions are all nominal lengths, use final spec sheet for exact data and model availability.
NOTE: Shipping weight does not include weight of pallets when needed.
NOTE: These merchandisers are designed for use in stores where temperature and humidity do not exceed listed operating conditions.
NOTE: We reserve the right to change specifications and product design without notice

©November 18, 2026 Excellence Industries

Excellence Industries

Profit from the Power of Partnership.



KOF

REFRIGERATED PROMOTION COUNTER

KEY FEATURES

- Horizontal open display case
- Ventilated refrigeration
- Interior temperature display
- LED lighting
- Night curtain
- 3.5-foot cord
- Environmentally friendly R-290 refrigerant
- Temperature range of +30°F to +44°F

ADVANTAGES

- Open merchandiser design keeps product easy to shop
- Four model widths support flexible placements
- Stainless steel interior with pre-coated exterior
- Automatic drain water heater



KOF-2

DOE LISTED

Complies with 2017 DOE standards for self-contained commercial refrigerators and commercial freezers without doors

1950 Joe McIntosh Rd
Plant City, FL 33565
800.441.4014 | 813.870.0340
www.excellenceindustries.com



KOF

REFRIGERATED PROMOTION COUNTER

SPECIFICATIONS

Model	KOF-2	KOF-3	KOF-4	KOF-5
Cubic Feet	6.8	9.5	12.5	15.5
Width	28”	39”	51”	63”
Approx. Weight (Net)	331 lb (150 kg)	390 lb (177 kg)	448 lb (203 kg)	551 lb (250 kg)
Approx. Weight (Shipping)	375 lb (170 kg)	434 lb (197kg)	514 lb (233 kg)	595 lb (270 kg)
Running Amps	6	8	8	10.4
Compressor HP	1/2	3/4	3/4	1/2 x 2
Container Quantity	78	52	42	28

NEMA 5-15P



115 / 60 / 1

AVAILABLE OPTIONS

- N/A

PRODUCT INFORMATION

Click or scan QR to access spec sheets and technical information

KOF SERIES

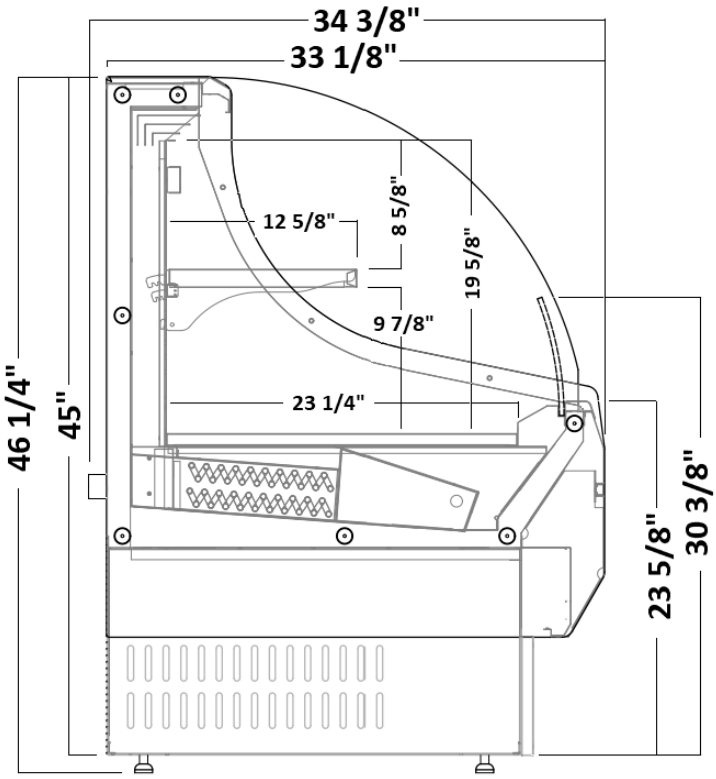

NOTE: Dimensions are in inches.
NOTE: Dimensions are all nominal lengths, use final spec sheet for exact data and model availability.
NOTE: Shipping weight does not include weight of pallets when needed.
NOTE: These merchandisers are designed for use in stores where temperature and humidity do not exceed listed operating conditions.
NOTE: We reserve the right to change specifications and product design without notice

©November 18, 2026 Excellence Industries

Excellence Industries

Excellence Industries

Profit from the Power of Partnership.



TDAL

SEMI-VERTICAL MULTIDECKS

KEY FEATURES

- Electronic controller with temperature indicator
- Zinc plated steel, powder coated in black
- 3 rows of adjustable shelves, price holders and lights on each shelf
- 9.75-foot cord
- Environmentally friendly R-290 refrigerant
- Temperature range of +32°F to +35.6°F

ADVANTAGES

- Can be used as inline or combined as an island
- Self-contained so units can be easily moved
- Excellent lighting to enhance product display

Produced in cooperation with

JBG2



TDAL

DOE LISTED

Complies with 2017 DOE standards for

1950 Joe McIntosh Rd
Plant City, FL 33565
800.441.4014 | 813.870.0340
www.excellenceindustries.com



TDAL

SEMI-VERTICAL MULTIDECKS

SPECIFICATIONS

Model	TDAL-1219	TDAL-1828	TDAL-2438	TDAL-3048	TDAL-3658	TDAL-1870
Cubic Feet	26.7	40.1	53.49	66.9	80.25	41.1
Length	4’	6’	8’	10’	12’	6’
Approx. Weight (Net)	595 lb (270 kg)	772 lb (380 kg)	970 lb (440 kg)	882 lb (400 kg)	1058 lb (480 kg)	838 lb (380 kg)
Approx. Weight (Shipping)	683 lb (310 kg)	881 lb (400 kg)	1080 lb (490 kg)	970 lb (440 kg)	1168 lb (530 kg)	948 lb (430 kg)
Running Amps	5.2	4.9	7.6	9.6	9.7	9.1
Compressor HP	1 3/8	1 1/4	2	2 1/2	2 1/2	2
Container Quantity	TBD	12/24	8/16	6/12	6/12	12/24

NEMA 6-15P



208 / 60 / 1

AVAILABLE OPTIONS

- Undershelf lighting
- Plexiglass divider
- Sidewalls (in the straight module – a full side with a mirror, in the end case – a full, glazed side)

PRODUCT INFORMATION

Click or scan QR to access spec sheets and technical information

TDAL SERIES

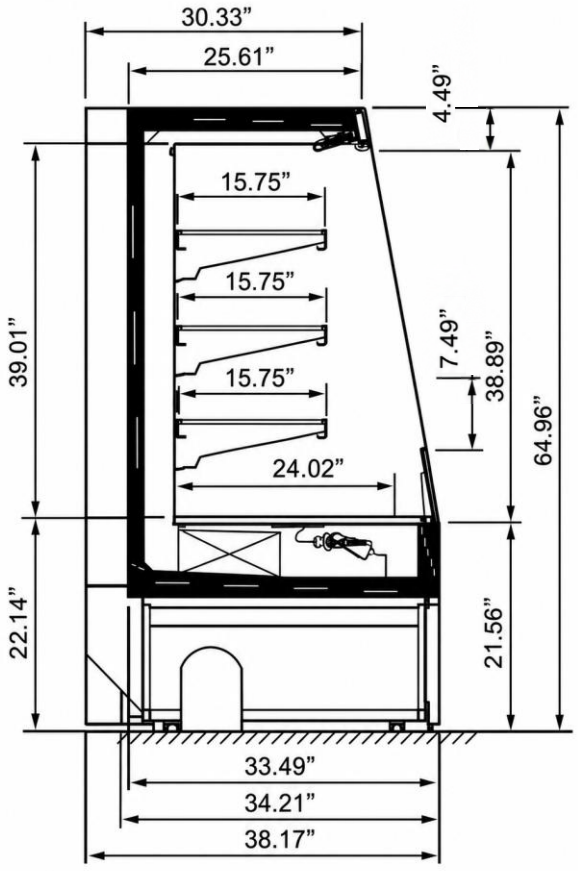

NOTE: Dimensions are in inches.
NOTE: Dimensions are all nominal lengths, use final spec sheet for exact data and model availability.
NOTE: Shipping weight does not include weight of pallets when needed.
NOTE: These merchandisers are designed for use in stores where temperature and humidity do not exceed listed operating conditions.
NOTE: We reserve the right to change specifications and product design without notice

©November 18, 2026 Excellence Industries

Countertop Merchandiser



CTF 86

CTFMS 88

CTF-T 90

CTM 92

CVL 94

EMM-HC 96

MINI 98

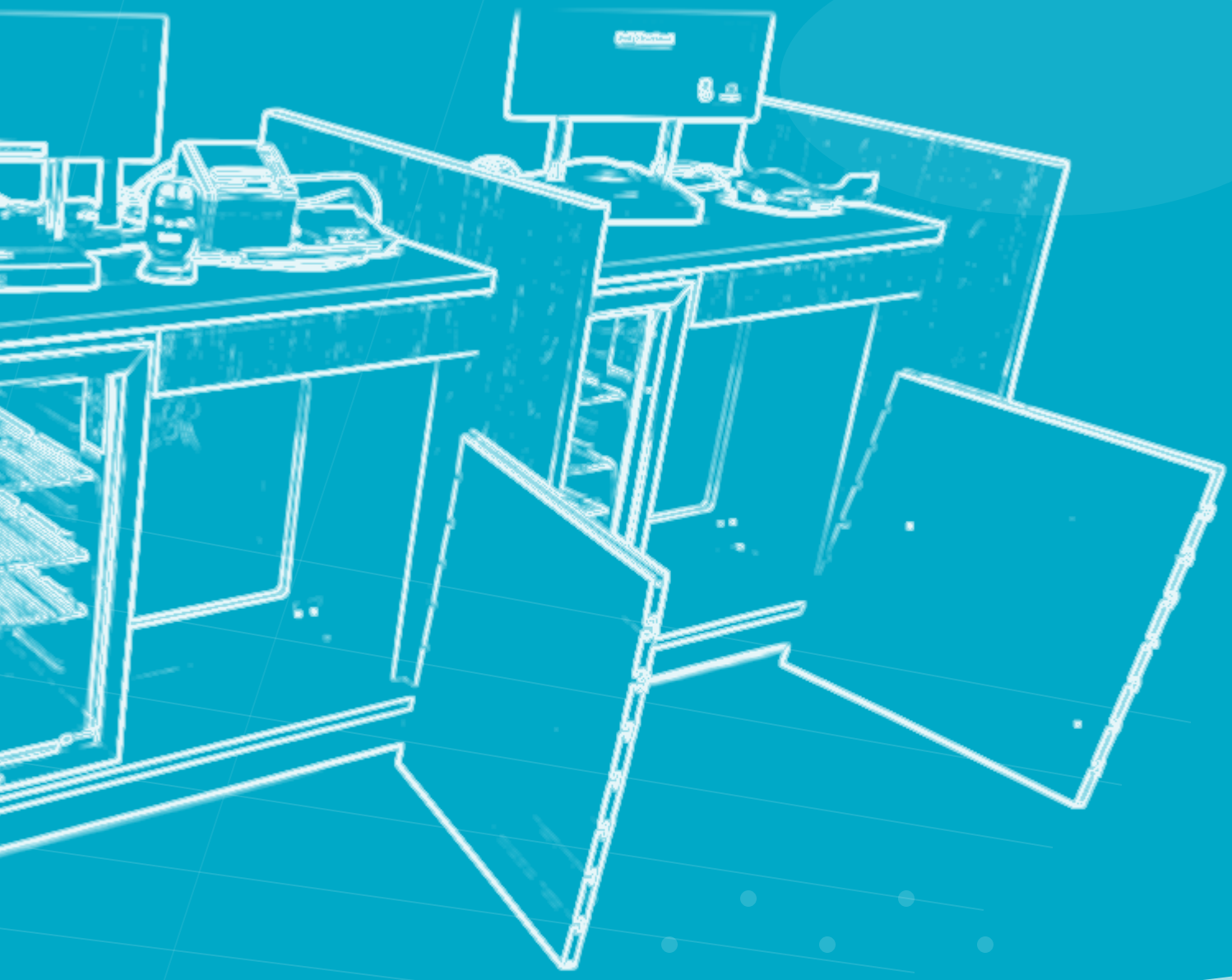

Excellence Industries

Profit from the Power of Partnership.



CTF

COUNTERTOP FREEZER & ICE CREAM FREEZER

KEY FEATURES

- Adjustable shelves
- Interior LED light
- Fully insulated glass door
- Standard door lock
- 8.25-foot cord
- Environmentally friendly R-290 refrigerant
- Temperature range -15°F to +15°F

ADVANTAGES

- Compact size fits on counters where floor space is limited
- Great for impulse sales near checkout or service areas
- Easy to relocate when store layouts change
- Good option for adding frozen sales without a full-size freeze



CTF-3HC

DOE LISTED

Complies with 2017 DOE standards
for commercial freezer and ice cream freezer

1950 Joe McIntosh Rd
Plant City, FL 33565
800.441.4014 | 813.870.0340
www.excellenceindustries.com



CTF

COUNTERTOP FREEZER & ICE CREAM FREEZER

SPECIFICATIONS

Model	CTF-2HC	CTF-3HC
Cubic Feet	1.9	3.4
Approx. Weight (Net)	76 lb (34 kg)	95 lb (43 kg)
Approx. Weight (Shipping)	84 lb (38 kg)	103 lb (47 kg)
Running Amps	2.1	3.6
Compressor HP	1/4	2/5
Optional Baskets	2	3
Container Quantity	304	171

NEMA 5-15P



115 / 60 / 1

AVAILABLE OPTIONS

- Lighted door graphic
- Graphics
- Left hinge units

PRODUCT INFORMATION

Click or scan QR to access spec sheets and technical information

CTF-2HC

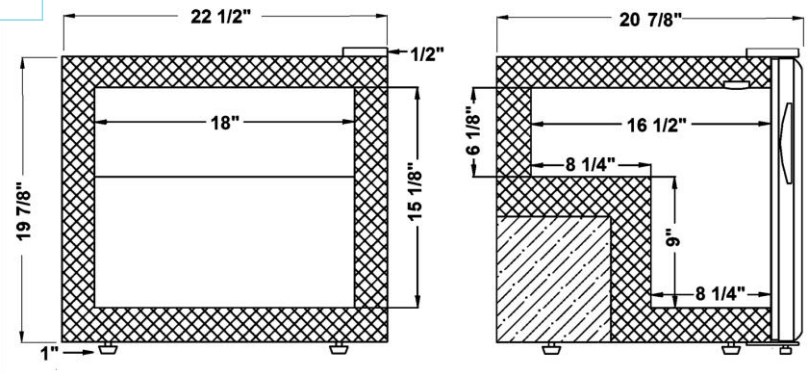

CTF-3HC

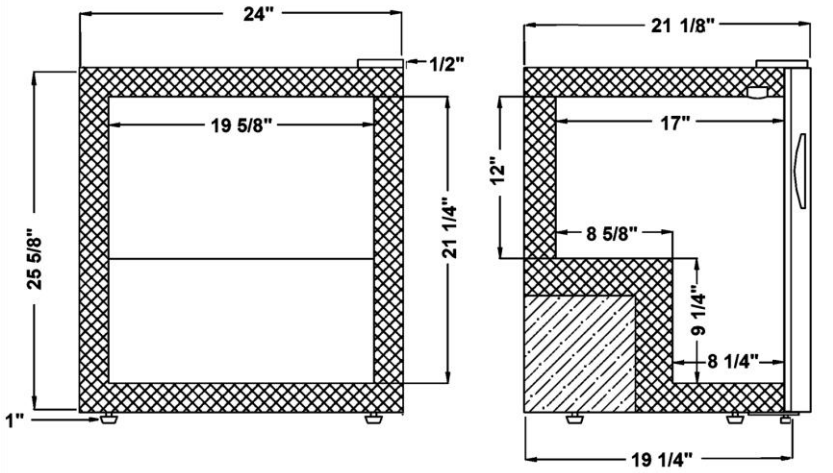



Double Combo-MCT-4HC with 2 optional CTF-3HC



Combo-MCT-2HC with 1 optional CTF-3HC

NOTE: Dimensions are in inches.
NOTE: Dimensions are all nominal lengths, use final spec sheet for exact data and model availability.
NOTE: Shipping weight does not include weight of pallets when needed.
NOTE: These merchandisers are designed for use in stores where temperature and humidity do not exceed listed operating conditions.
NOTE: We reserve the right to change specifications and product design without notice

ENERGY PERFORMANCE VERIFIED
RENDEMENT ENERGETIQUE VERIFIE
Intertek EP 5011291
CTF-3HC

Excellence Industries

Profit from the Power of Partnership.



CTF MS

COUNTERTOP FREEZER & ICE CREAM FREEZER WITH MERCHANDISING SIGN

KEY FEATURES

- Adjustable shelves
- Fully insulated glass door
- Lighted sign
- Interior LED light
- Standard door lock
- 8.25-foot cord
- Environmentally friendly R-290 refrigerant
- Temperature range of -15°F to +15°F

ADVANTAGES

- Counter-ready footprint lets stores add frozen merchandising without giving up aisle space
- Strong option for impulse frozen sales in convenience stores, cafeterias, and snack bars



CTF-4HCMS

DOE LISTED

Complies with 2017 DOE standards
for commercial freezer and ice cream freezer

1950 Joe McIntosh Rd
Plant City, FL 33565
800.441.4014 | 813.870.0340
www.excellenceindustries.com



CTF MS

COUNTERTOP FREEZER & ICE CREAM FREEZER WITH MERCHANDISING SIGN

SPECIFICATIONS

Model	CTF-2HCMS	CTF-4HCMS
Cubic Feet	1.9	4.2
Approx. Weight (Net)	90 lb (41 kg)	110 lb (50 kg)
Approx. Weight (Shipping)	96 lb (44 kg)	117 lb (53 kg)
Running Amps	2.1	3.6
Compressor HP	1/4	2/5
Shelves	2	3
Container Quantity	171	114

NEMA 5-15P



115 / 60 / 1

AVAILABLE OPTIONS

- Light door graphic (minimum quantities apply)
- Graphics

PRODUCT INFORMATION

Click or scan QR to access spec sheets and technical information

CTF-2HCMS

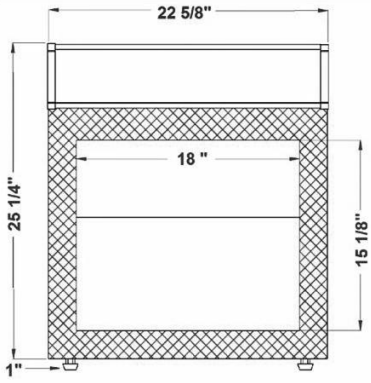

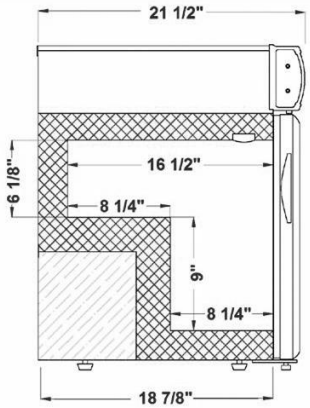

CTF-4HCMS

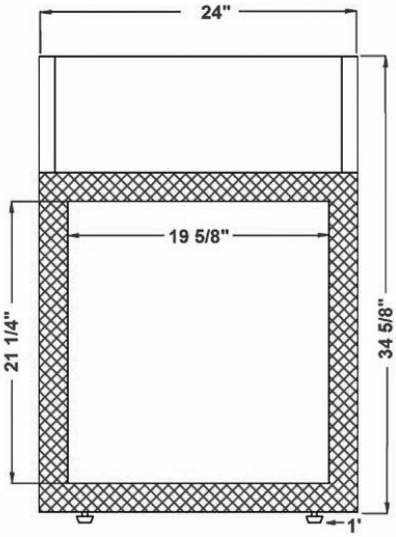

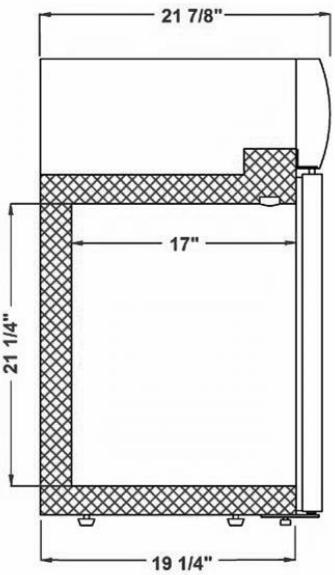

NOTE: Dimensions are in inches.
NOTE: Dimensions are all nominal lengths, use final spec sheet for exact data and model availability.
NOTE: Shipping weight does not include weight of pallets when needed.
NOTE: These merchandisers are designed for use in stores where temperature and humidity do not exceed listed operating conditions.
NOTE: We reserve the right to change specifications and product design without notice

©November 18, 2026 Excellence Industries

Excellence Industries

Profit from the Power of Partnership.



CTF-T

COUNTERTOP FREEZER & ICE CREAM FREEZER

KEY FEATURES

- Adjustable shelves
- Interior LED light
- Small footprint
- Aluminum door frame
- 8.25-foot cord
- Environmentally friendly R-600a refrigerant
- Temperature range of -15°F to +15°F

ADVANTAGES

- Fits easily into tight countertop spaces or small service areas
- Keeps frozen items organized and easy to present at customer height
- Lightweight display style makes it easier to reposition as layouts change



CTF-1T

DOE LISTED

Complies with 2017 DOE standards
for commercial freezer and ice cream freezer

1950 Joe McIntosh Rd
Plant City, FL 33565
800.441.4014 | 813.870.0340
www.excellenceindustries.com



CTF-T

COUNTERTOP FREEZER & ICE CREAM FREEZER

SPECIFICATIONS

Model	CTF-1T	CTF-2T
Cubic Feet	1.3	2.0
Approx. Weight (Net)	73 lb (33 kg)	82 lb (37 kg)
Approx. Weight (Shipping)	82 lb (37 kg)	93 lb (42 kg)
Running Amps	1.2	1.4
Compressor HP	1/5	1/5
Shelves	2	3
Container Quantity	375	250

NEMA 5-15P



115 / 60 / 1

AVAILABLE OPTIONS

- Lighted door graphic
- Graphics
- Left hinge units
- Lighted door frame (container orders only)

PRODUCT INFORMATION

Click or scan QR to access spec sheets and technical information

CTF-T SERIES

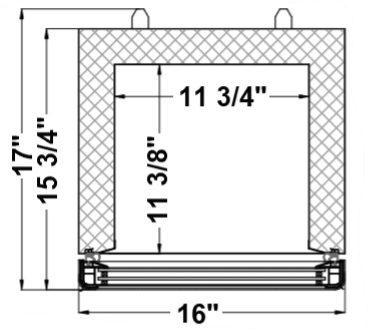

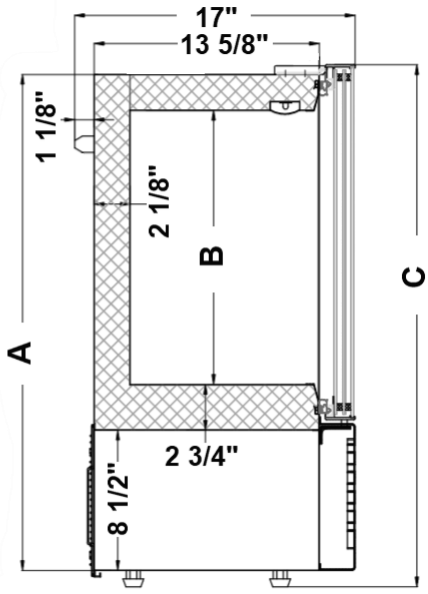

Model	A	B	C
CTF-1T	30”	16 1/2”	31 1/2”
CTF-2T	37 7/8”	24 3/8”	39 3/8”

NOTE: Dimensions are in inches.
NOTE: Dimensions are all nominal lengths, use final spec sheet for exact data and model availability.
NOTE: Shipping weight does not include weight of pallets when needed.
NOTE: These merchandisers are designed for use in stores where temperature and humidity do not exceed listed operating conditions.
NOTE: We reserve the right to change specifications and product design without notice

©November 18, 2026 Excellence Industries

Excellence Industries

Excellence Industries

Profit from the Power of Partnership.



CTM

HEAVY DUTY COUNTERTOP COOLER

KEY FEATURES

- Illuminated top header sign
- Forced air evaporator
- Internal LED lighting
- 6-foot cord
- Environmentally friendly R-290 refrigerant
- Temperature range of +32°F to +39°F

ADVANTAGES

- Heavy duty doors allow for self closing
- Good for drinks, grab-and-go foods, and chilled impulse items
- Supports clean product presentation for branded or private-label items



CTM-7HC

DOE LISTED

Complies with 2017 DOE standards for commercial cooler

1950 Joe McIntosh Rd
Plant City, FL 33565
800.441.4014 | 813.870.0340
www.excellenceindustries.com



CTM HEAVY DUTY COUNTERTOP COOLER

SPECIFICATIONS

Model	CTM-7HC
Cubic Feet	7
Approx. Weight (Net)	141 lb (64 kg)
Approx. Weight (Shipping)	149 lb (68 kg)
Running Amps	1.4
Compressor HP	1/8
No. of 20 oz Bottles	102
Shelves	3
Container Quantity	144

NEMA 5-15P



115 / 60 / 1

AVAILABLE OPTIONS

- Graphics

PRODUCT INFORMATION

Click or scan QR to access spec sheets and technical information

CTM-7HC

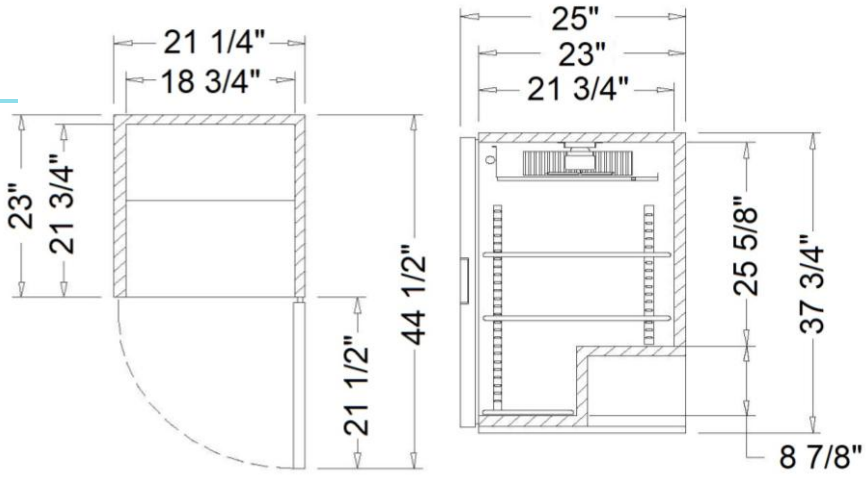

NOTE: Dimensions are in inches.
NOTE: Dimensions are all nominal lengths, use final spec sheet for exact data and model availability.
NOTE: Shipping weight does not include weight of pallets when needed.
NOTE: These merchandisers are designed for use in stores where temperature and humidity do not exceed listed operating conditions.
NOTE: We reserve the right to change specifications and product design without notice

©November 18, 2026 Excellence Industries

Excellence Industries

Profit from the Power of Partnership.



CVL

COUNTERTOP LIFT & ICE CREAM FREEZER

KEY FEATURES

- Small Footprint
- Light switch
- 12.75-foot cord / 9.75-foot accessible cord
- Environmentally friendly R-290a refrigerant
- Temperature range of -15°F to +15°F

ADVANTAGES

- Works well in tight retail, café, or back-counter spaces
- Simple controls make daily operation straightforward for staff
- Clean presentation fits into customer-facing or staff-access areas



CVL-1

DOE LISTED

Complies with 2017 DOE standards for freezer and ice cream freezer

1950 Joe McIntosh Rd
Plant City, FL 33565
800.441.4014 | 813.870.0340
www.excellenceindustries.com



CVL

COUNTERTOP LIFT & ICE CREAM FREEZER

SPECIFICATIONS

Model	CVL-1
Cubic Feet	0.4
Approx. Weight (Net)	26 lb (12 kg)
Approx. Weight (Shipping)	31 lb (14 kg)
Running Amps	1
Compressor HP	1/6
Display Area	0.67 sq ft
Container Quantity	848

NEMA 5-15P



115 / 60 / 1

PRODUCT INFORMATION

Click or scan QR to access spec sheets and technical information

AVAILABLE OPTIONS

- Graphics

CVL-1

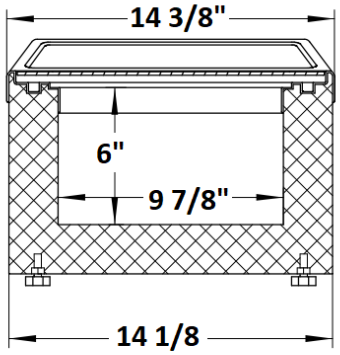

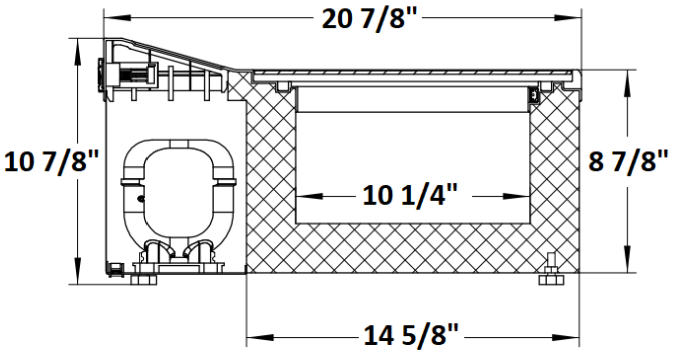

NOTE: Dimensions are in inches.
NOTE: Dimensions are all nominal lengths, use final spec sheet for exact data and model availability.
NOTE: Shipping weight does not include weight of pallets when needed.
NOTE: These merchandisers are designed for use in stores where temperature and humidity do not exceed listed operating conditions.
NOTE: We reserve the right to change specifications and product design without notice

©November 18, 2026 Excellence Industries

Excellence Industries

Profit from the Power of Partnership.



EMM-HC

COUNTERTOP COOLER

KEY FEATURES

- Interior LED light
- Door lock and key
- Reversible door
- Fully insulated glass door
- Recessed handle
- 6-foot cord
- Environmentally friendly R-600a refrigerant
- Temperature range of +32°F to +40°F

ADVANTAGES

- Clean front-facing design fits neatly into cafés, offices, markets, and service counters
- Useful for placing refrigerated items closer to the point of sale
- Works well for seasonal promos, checkout add-ons, or small chilled selections



EMM-3HC

DOE LISTED

Complies with 2017 DOE standards for commercial cooler

1950 Joe McIntosh Rd
Plant City, FL 33565
800.441.4014 | 813.870.0340
www.excellenceindustries.com



EMM-HC COUNTERTOP COOLER

SPECIFICATIONS

Model	EMM-2HC	EMM-3HC	EMM-4HC	EMM-5HC
Cubic Feet	1.6	2.5	3.7	4.3
Approx. Weight (Net)	44 lb (20 kg)	55 lb (25 kg)	75 lb (34 kg)	82 lb 37 kg)
Approx. Weight (Shipping)	50 lb (23 kg)	63 lb (29 kg)	81 lb (37 kg)	90 lb (41 kg)
Running Amps	0.9	0.9	1.2	1.1
Compressor HP	1/12	1/12	1/12	1/12
Shelves	1	3	4	4
Container Quantity	384	288	252	171

NEMA 5-15P



115 / 60 / 1

AVAILABLE OPTIONS

- Graphics

PRODUCT INFORMATION

Click or scan QR to access spec sheets and technical information

EMM-2HC

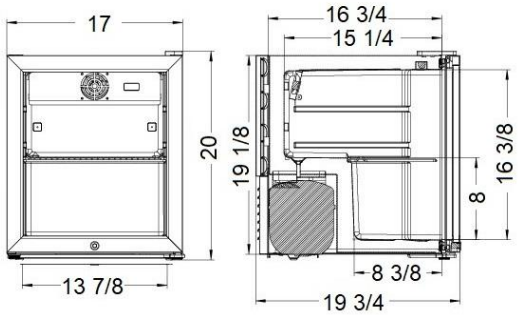

EMM-3HC

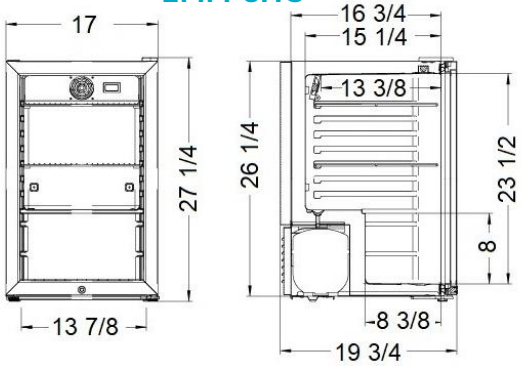

EMM-4HC

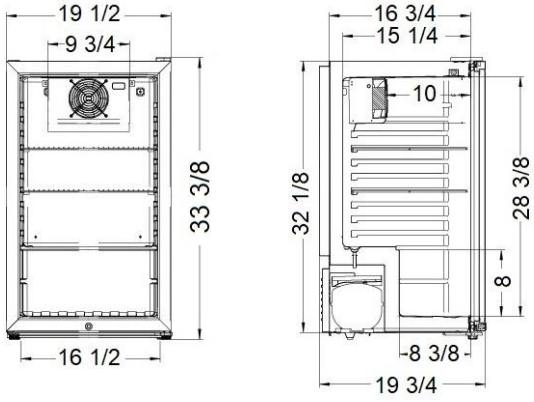

EMM-5HC

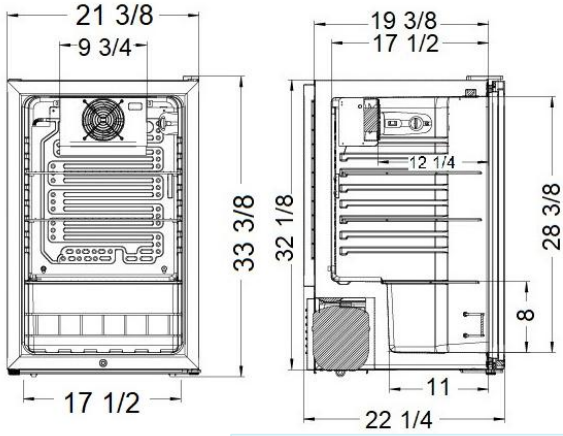

NOTE: Dimensions are in inches.
NOTE: Dimensions are all nominal lengths, use final spec sheet for exact data and model availability.
NOTE: Shipping weight does not include weight of pallets when needed.
NOTE: These merchandisers are designed for use in stores where temperature and humidity do not exceed listed operating conditions.
NOTE: We reserve the right to change specifications and product design without notice

Excellence Industries

Profit from the Power of Partnership.



MINI

COUNTERTOP GLASS DOOR ICE CREAM FREZER

KEY FEATURES

- Small Footprint
- Interior LED Lighting
- 8.25-foot cord
- Environmentally friendly R-600a refrigerant
- Temperature range of -15°F to +15°F

ADVANTAGES

- Designed to run efficiently during everyday use
- Self-closing door supports better cold-air retention
- Helps customers browse products quickly in self-serve areas



MINI-1

Shown with optional lighted door frame

DOE LISTED

Complies with 2017 DOE standards for ice cream freezer

1950 Joe McIntosh Rd
Plant City, FL 33565
800.441.4014 | 813.870.0340
www.excellenceindustries.com



MINI

COUNTERTOP GLASS DOOR ICE CREAM FREZER

SPECIFICATIONS

Model	MINI-1
Cubic Feet	0.6
Approx. Weight (Net)	45 lb (20 kg)
Approx. Weight (Shipping)	50 lb (23 kg)
Running Amps	1
Compressor HP	1/9
Shelves	1
Container Quantity	710

NEMA 5-15P



115 / 60 / 1

AVAILABLE OPTIONS

- Graphics
- Lighted door frame

PRODUCT INFORMATION

Click or scan QR to access spec sheets and technical information

MINI-1

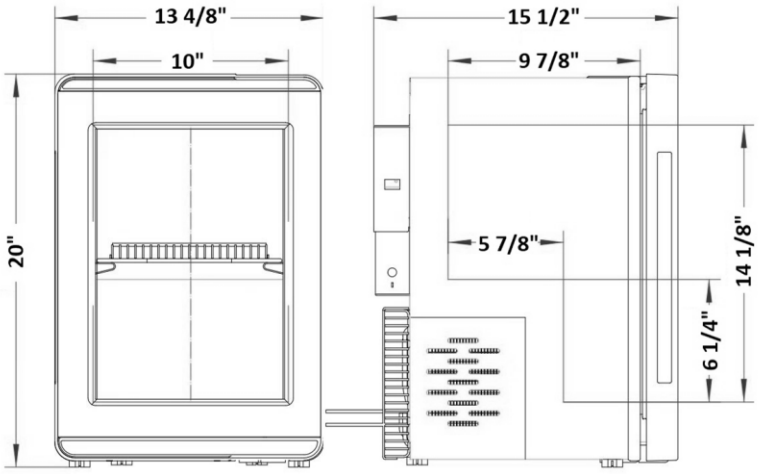

NOTE: Dimensions are in inches.
NOTE: Dimensions are all nominal lengths, use final spec sheet for exact data and model availability.
NOTE: Shipping weight does not include weight of pallets when needed.
NOTE: These merchandisers are designed for use in stores where temperature and humidity do not exceed listed operating conditions.
NOTE: We reserve the right to change specifications and product design without notice

©November 18, 2026 Excellence Industries

Excellence Industries

Storage

BD	102
BD JUMBO	104
CR/CF	106
CR/CF-SS	108
DSS-C	110
DSS-CG	112
DSS-F	114
FT	116
HFF	118
ISL	120
MCSC	122





Excellence Industries

Profit from the Power of Partnership.



BD

STORAGE FREEZER

KEY FEATURES

- Cold wall refrigeration system
- Casters with 2 locking
- Painted steel interior
- One hanging basket
- 12.75-foot cord / 9.75-foot accessible cord
- Environmentally friendly hydrocarbon refrigerant
- Temperature range of -5°F to +25°F

ADVANTAGES

- Bottom drain for easy defrost
- Easily moved for relocation or cleaning
- Energy efficient refrigeration system



BD-11

DOE LISTED

Complies with 2017 DOE standards
for commercial freezer with solid door

1950 Joe McIntosh Rd
Plant City, FL 33565
800.441.4014 | 813.870.0340
www.excellenceindustries.com



BD STORAGE FREEZER

SPECIFICATIONS

Model	BD-11	BD-13	BD-16	BD-19
Cubic Feet	10.7	13.2	15.8	19.1
Approx. Weight (Net)	132 lb (60 kg)	148 lb (67 kg)	176 lb (80 kg)	192 lb (87 kg)
Approx. Weight (Shipping)	148 lb (67 kg)	165 lb (75 kg)	194 lb (88 kg)	216 lb (98 kg)
Running Amps	1.9	1.9	1.9	1.9
Compressor HP	9/50	9/50	1/5	1/5
Refrigerant	R-600a	R-600a	R-290	R-290
Container Quantity	90	75	66	56

PRODUCT INFORMATION

Click or scan QR to access spec sheets and technical information

NEMA 5-15P



115 / 60 / 1

AVAILABLE OPTIONS

- Graphics
- Extra baskets

BD SERIES

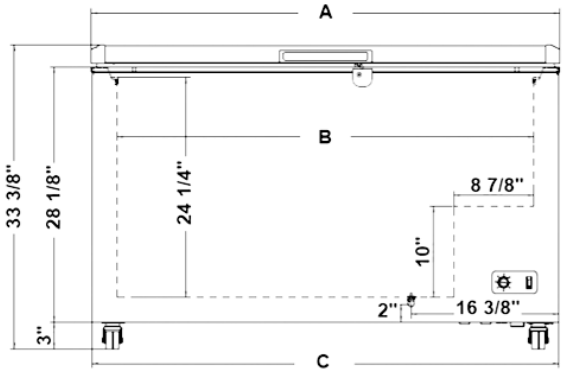

Model	A	B	C
BD-11	43 1/2”	37 3/4”	43 3/8”
BD-13	51 3/4”	46”	51 5/8”
BD-16	59 1/2”	53 3/4”	59 1/4”
BD-19	70 7/8”	65 1/8”	70 3/4”

NOTE: Dimensions are in inches.
NOTE: Dimensions are all nominal lengths, use final spec sheet for exact data and model availability.
NOTE: Shipping weight does not include weight of pallets when needed.
NOTE: These storage units are designed for use in stores where temperature and humidity do not exceed listed operating conditions.
NOTE: We reserve the right to change specifications and product design without notice

©November 18, 2026 Excellence Industries

Excellence Industries

Excellence Industries

Profit from the Power of Partnership.



BD JUMBO

JUMBO STORAGE FREEZER

KEY FEATURES

- Cold wall refrigeration
- Rollers for BD-24 & BD-27
- Casters for BD-31, BD-35 & BD-42
- Painted steel interior
- BD-42: 3 lids
- 6-foot cord
- Environmentally friendly R-290 refrigerant
- Temperature range of -5°F to +25°F

ADVANTAGES

- Bottom drain for easy defrost
- Easily moved for relocation or cleaning
- Energy efficient refrigeration system
- Multiple lids for easy access



BD-27

DOE LISTED

Complies with 2017 DOE standards
for commercial freezer with solid door

1950 Joe McIntosh Rd
Plant City, FL 33565
800.441.4014 | 813.870.0340
www.excellenceindustries.com

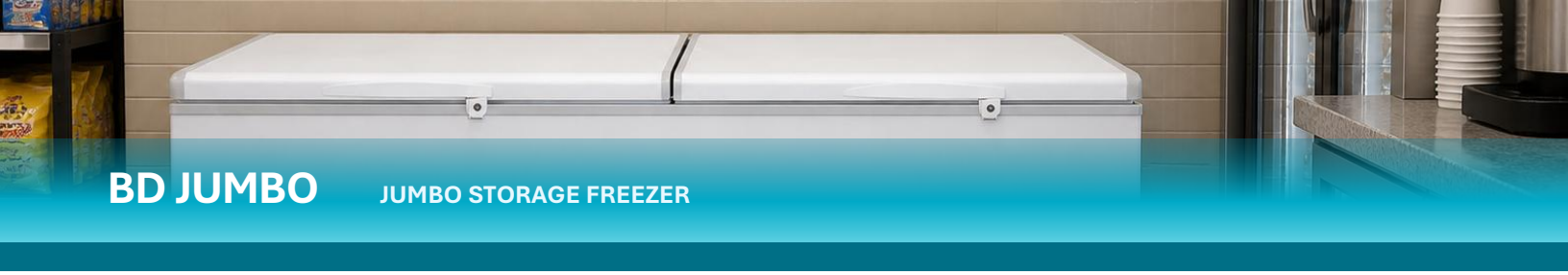

BD JUMBO

JUMBO STORAGE FREEZER

SPECIFICATIONS

Model	BD-24	BD-27	BD-31	BD-35	BD-42*
Cubic Feet	23.7	26.7	30.7	35	42
Approx. Weight (Net)	179 lb (81 kg)	190 lb (86 kg)	206 lb (93.4 kg)	224 lb (101.6 kg)	282 lb (128 kg)
Approx. Weight (Shipping)	198 lb (90 kg)	212 lb (96 kg)	240 lb (109 kg)	262 lb (119 kg)	324 lb (147 kg)
Running Amps	2.3	2.3	3.0	3.0	5.4
Compressor HP	1/5	1/5	1/4	1/4	1/5 x 2
Container Quantity	47	45	24	24	16

NEMA 5-15P



115 / 60 / 1

PRODUCT INFORMATION

Click or scan QR to access spec sheets and technical information

AVAILABLE OPTIONS

- Graphics
- Extra baskets
- *BD-42 available in container orders only

BD JUMBO SERIES

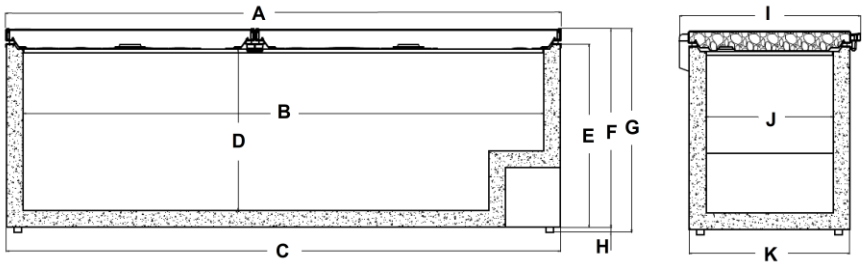

Model	A	B	C	D	E	F	G	H	I	J	K
BD-24	81 5/8”	76”	81 1/2”	26 1/2”	30”	32 1/2”	33 1/4”	3/4”	29 3/4”	20 7/8”	26 3/8”
BD-27	91 1/8”	85 1/2”	91”	26 1/2”	30”	32 1/2”	33 1/4”	3/4”	29 3/4”	20 7/8”	26 3/8”
BD-31	79 7/8”	74 1/4”	79 3/4”	27 7/8”	31 7/8”	34 3/8”	37 1/8”	2 3/4”	36 1/8”	27 1/8”	32 3/4”
BD-35	89 1/2”	83 7/8”	89 3/8”	27 7/8”	31 7/8”	34 3/8”	37 1/8”	2 3/4”	36 1/8”	27 1/8”	32 3/4”
BD-42	105 1/4”	99 5/8”	105 1/8”	27 7/8”	31 7/8”	34 3/8”	37 1/8”	2 3/4”	36 1/8”	27 1/8”	32 3/4”

NOTE: Dimensions are in inches.
NOTE: Dimensions are all nominal lengths, use final spec sheet for exact data and model availability.
NOTE: Shipping weight does not include weight of pallets when needed.
NOTE: These storage units are designed for use in stores where temperature and humidity do not exceed listed operating conditions.
NOTE: We reserve the right to change specifications and product design without notice

©November 18, 2026 Excellence Industries

Excellence Industries

Excellence Industries

Profit from the Power of Partnership.



CR/CF

ECONOMY LINE UPRIGHT STORAGE COOLER & FREEZER

KEY FEATURES

- Gray interior with stainless steel floors
- Door with lock and key
- Auto defrost
- LED interior lighting
- Painted steel exterior and interior
- 6-foot cord
- Environmentally friendly R-290 refrigerant

ADVANTAGES

- Low maintenance condenser and electronic control with energy saving button help reduce maintenance and operating costs
- Heavy duty steel to provide for longer life



CR-20HC

DOE LISTED

CR - Complies with 2017 DOE standards for commercial cooler
CF - Complies with 2017 DOE standards for commercial freezer

1950 Joe McIntosh Rd
Plant City, FL 33565
800.441.4014 | 813.870.0340
www.excellenceindustries.com

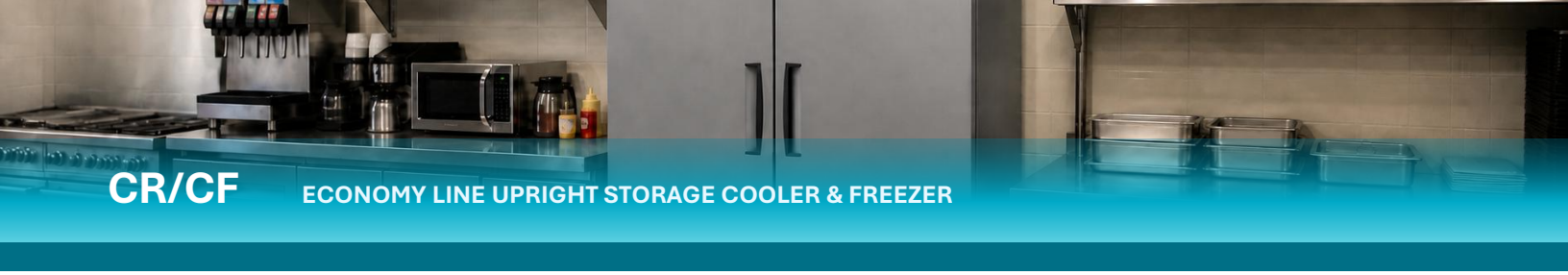

CR/CF ECONOMY LINE UPRIGHT STORAGE COOLER & FREEZER

SPECIFICATIONS

Model	CR-20HC	CR-43HC	CF-20HC	CF-43HC
Cubic Feet	20	43	20	43
Approx. Weight (Net)	276 lb (125 kg)	485 lb (220 kg)	276 lb (125 kg)	485 lb (220 kg)
Approx. Weight (Shipping)	286 lb (130 kg)	507 lb (230 kg)	286 lb (130 kg)	507 lb (230 kg)
Running Amps	2.5	4.3	4.4	4.7
Compressor HP	1/4	1/2	1/3	1/2
Temperature	+32°F to +39°F	+32°F to +39°F	-5°F to +25°F	-5°F to +25°F
Shelves	4	8	4	8
Container Quantity	45	24	45	24

NEMA 5-15P



115 / 60 / 1

PRODUCT INFORMATION

Click or scan QR to access spec sheets and technical information

AVAILABLE OPTIONS

- Extra shelves
- Casters

CR-20HC / CF-20HC

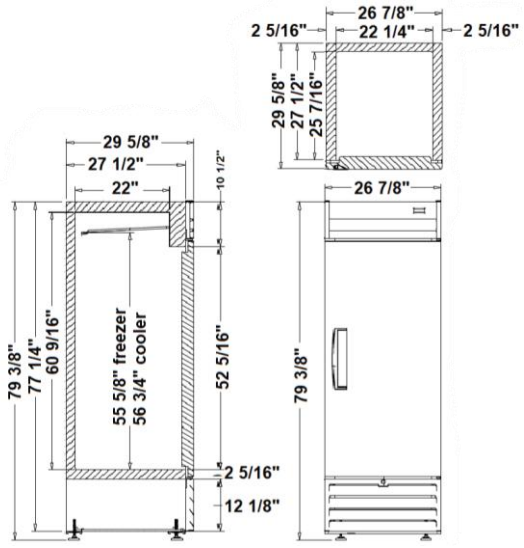

CR-43HC / CF-43HC

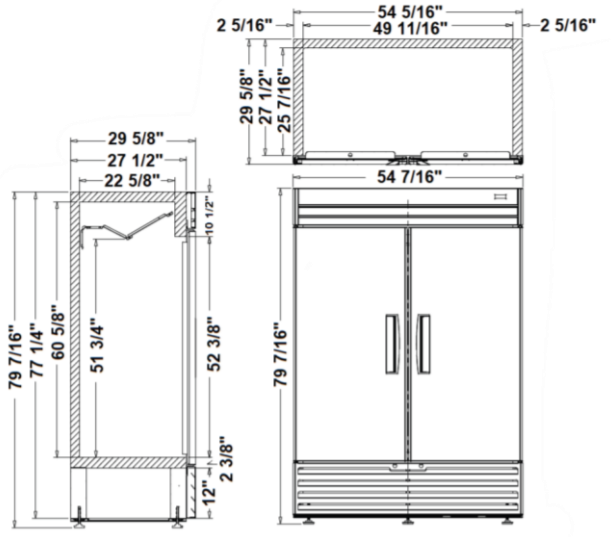

NOTE: Dimensions are in inches.
NOTE: Dimensions are all nominal lengths, use final spec sheet for exact data and model availability.
NOTE: Shipping weight does not include weight of pallets when needed.
NOTE: These storage units are designed for use in stores where temperature and humidity do not exceed listed operating conditions.
NOTE: We reserve the right to change specifications and product design without notice

©November 18, 2026 Excellence Industries

Excellence Industries

Profit from the Power of Partnership.



CR/CF-SS

PREMIUM LINE UPRIGHT STORAGE COOLER & FREEZER

KEY FEATURES

- Stainless steel exterior, aluminum interior with stainless steel floors
- Door with lock and key
- Auto defrost
- LED interior lighting
- Low maintenance condenser
- 6-foot cord
- Environmentally friendly R-290 refrigerant

ADVANTAGES

- Low maintenance condenser and electronic control with energy saving button help reduce maintenance and operating costs
- Heavy duty steel to provide for longer life



CR-20SSHC

DOE LISTED

CR - Complies with 2017 DOE standards for commercial cooler
CF - Complies with 2017 DOE standards for commercial freezer

1950 Joe McIntosh Rd
Plant City, FL 33565
800.441.4014 | 813.870.0340
www.excellenceindustries.com



CR/CF-SS PREMIUM LINE UPRIGHT STORAGE COOLER & FREEZER

SPECIFICATIONS

Model	CR-20SSHC	CR-43SSHC	CF-20SSHC	CF-43SSHC
Cubic Feet	20	43	20	43
Approx. Weight (Net)	276 lb (125 kg)	485 lb (220 kg)	276 lb (125 kg)	485 lb (220 kg)
Approx. Weight (Shipping)	286 lb (130 kg)	507 lb (230 kg)	286 lb (130 kg)	507 lb (230 kg)
Running Amps	2.5	4.3	4.4	4.7
Compressor HP	1/4	1/2	1/3	1/2
Temperature	+32°F to +39°F	+32°F to +39°F	-5°F to +25°F	-5°F to +25°F
Shelves	4	8	4	8
Container Quantity	45	24	45	24

NEMA 5-15P



115 / 60 / 1

PRODUCT INFORMATION

Click or scan QR to access spec sheets and technical information

AVAILABLE OPTIONS

- Extra shelves
- Casters

CR-20SSHC / CF-20SSHC

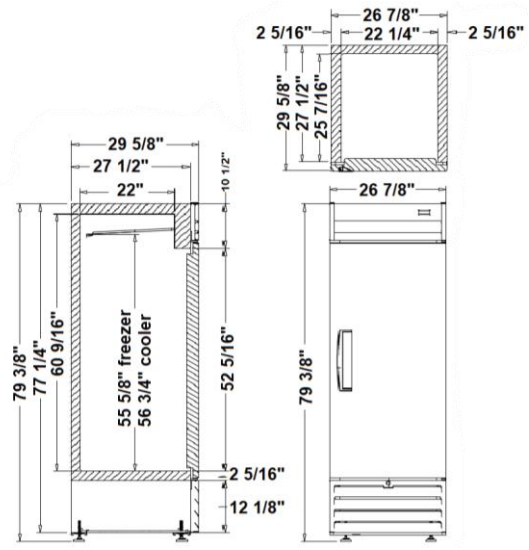

CR-43SSHC / CF-43SSHC

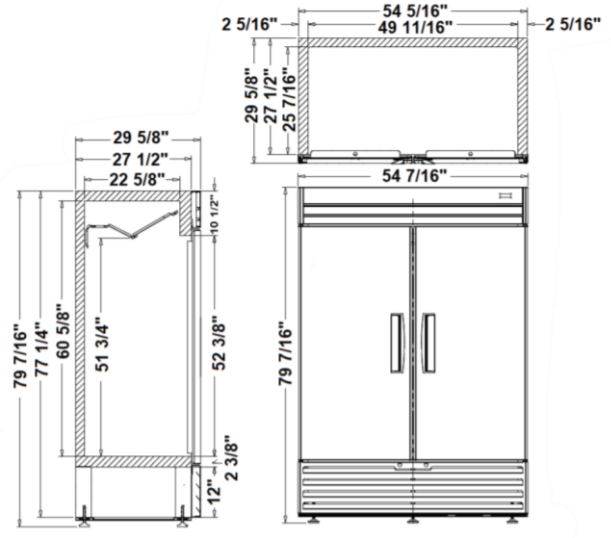

NOTE: Dimensions are in inches.
NOTE: Dimensions are all nominal lengths, use final spec sheet for exact data and model availability.
NOTE: Shipping weight does not include weight of pallets when needed.
NOTE: These storage units are designed for use in stores where temperature and humidity do not exceed listed operating conditions.
NOTE: We reserve the right to change specifications and product design without notice

©November 18, 2026 Excellence Industries

Excellence Industries

Profit from the Power of Partnership.



DSS-C

STAINLESS STEEL COOLER

KEY FEATURES

- Stainless steel exterior
- Precoated aluminum interior
- Automatic defrost
- Lock and key fitted as standard
- Self-closing solid doors, open to 180°
- 8.5-foot cord
- Environmentally friendly hydrocarbon refrigerant
- Temperature range of +35°F to +40°F

ADVANTAGES

- Plastic recessed door handles make them easy to grip
- Adjustable coated wire shelves are heavy duty and corrosion-resistant
- Evaporators with anti-corrosion treatment allows for longevity



DSS-19C

DOE LISTED

Complies with 2017 DOE standards
for commercial refrigerators with doors

1950 Joe McIntosh Rd
Plant City, FL 33565
800.441.4014 | 813.870.0340
www.excellenceindustries.com



DSS-C STAINLESS STEEL COOLER

SPECIFICATIONS

Model	DSS-19C	DSS-42C	DSS-66C
Cubic Feet	19.3	42.4	65.5
Approx. Weight (Net)	192 lb (87 kg)	310 lb (141 kg)	434 lb (197 kg)
Approx. Weight (Shipping)	227 lb (103 kg)	377 lb (171 kg)	514 lb (233 kg)
Running Amps	2.2	3.1	3.4
Compressor HP	1/7	1/3	1/3
Refrigerant	R-600a	R-290	R-290
Shelves	3	6	9
Container Quantity	42	21	13

NEMA 5-15P



115 / 60 / 1

AVAILABLE OPTIONS

- N/A

PRODUCT INFORMATION

Click or scan QR to access spec sheets and technical information

DSS-19C

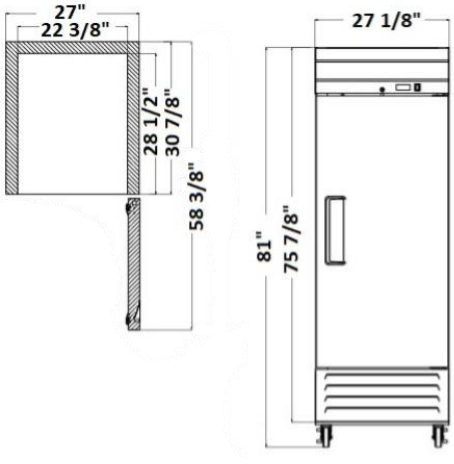

DSS-C (SIDE)

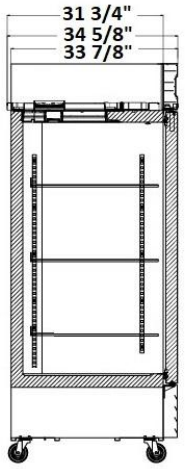

DSS-42C

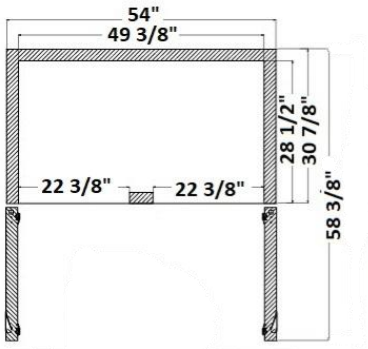

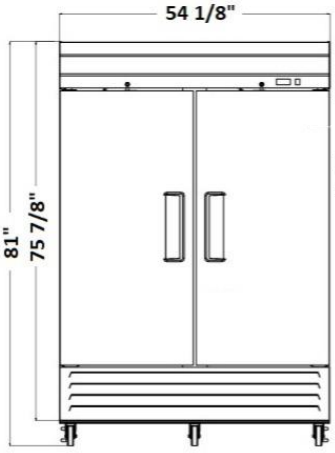

DSS-66C

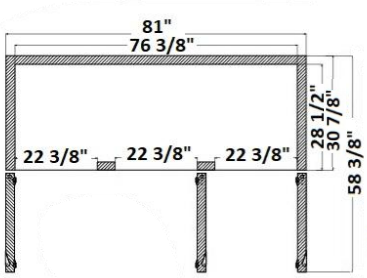

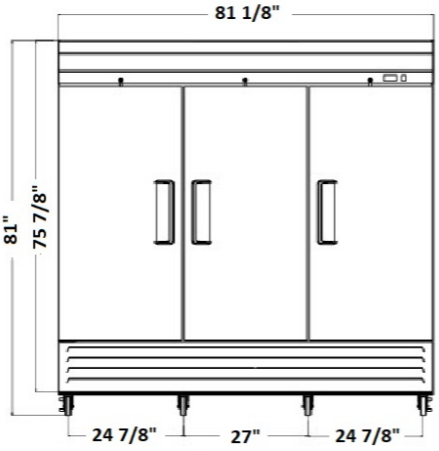

NOTE: Dimensions are in inches.
NOTE: Dimensions are all nominal lengths, use final spec sheet for exact data and model availability.
NOTE: Shipping weight does not include weight of pallets when needed.
NOTE: These storage units are designed for use in stores where temperature and humidity do not exceed listed operating conditions.
NOTE: We reserve the right to change specifications and product design without notice

©November 18, 2026 Excellence Industries

Excellence Industries

Profit from the Power of Partnership.



DSS-CG

STAINLESS STEEL GLASS DOOR COOLER

KEY FEATURES

- Stainless steel exterior
- Precoated aluminum interior
- Automatic defrost
- Lock and key fitted as standard
- Self-closing glass doors, open to 180°
- 8.5-foot cord
- Environmentally friendly hydrocarbon refrigerant
- Temperature range of +35°F to +40°F

ADVANTAGES

- Plastic recessed door handles make them easy to grip
- Adjustable coated wire shelves are heavy duty and corrosion-resistant
- Evaporators with anti-corrosion treatment allows for longevity



DSS-66CG

DOE LISTED

Complies with 2017 DOE standards
for commercial refrigerators with glass doors

1950 Joe McIntosh Rd
Plant City, FL 33565
800.441.4014 | 813.870.0340
www.excellenceindustries.com



DSS-CG STAINLESS STEEL GLASS DOOR COOLER

SPECIFICATIONS

Model	DSS-19CG	DSS-42CG	DSS-66CG
Cubic Feet	19.3	42.4	65.5
Approx. Weight (Net)	211 lb (96 kg)	354 lb (161 kg)	514 lb (233 kg)
Approx. Weight (Shipping)	247 lb (112 kg)	421 lb (191 kg)	593 lb (269 kg)
Running Amps	1.9	3.3	6.6
Compressor HP	1/7	1/3	1/2
Refrigerant	R-600a	R-290	R-290
Shelves	3	6	9
Container Quantity	36	20	12

NEMA 5-15P



115 / 60 / 1

AVAILABLE OPTIONS

- N/A

PRODUCT INFORMATION

Click or scan QR to access spec sheets and technical information

DSS-19CG

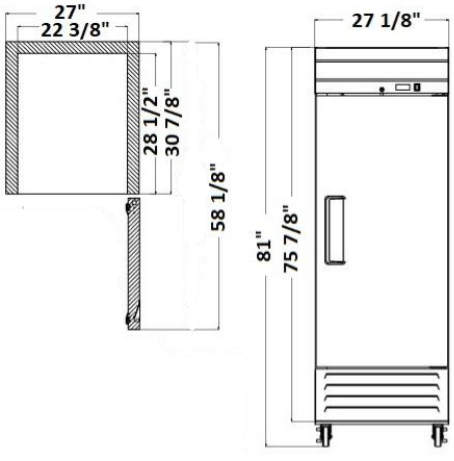

DSS-CG (SIDE)

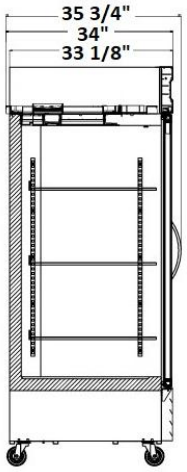

DSS-42CG

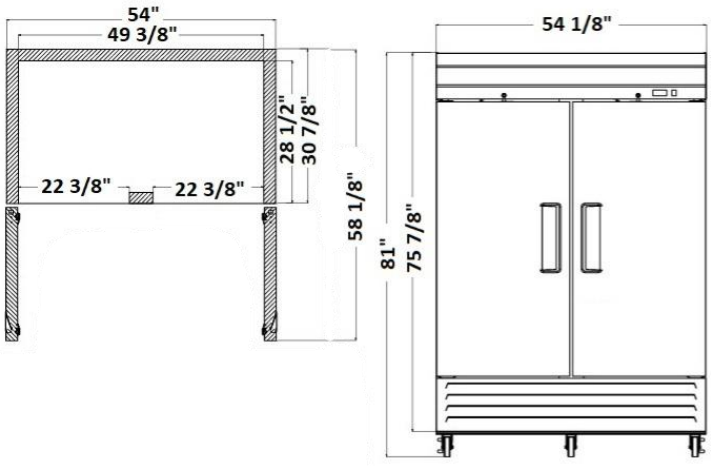

DSS-66CG

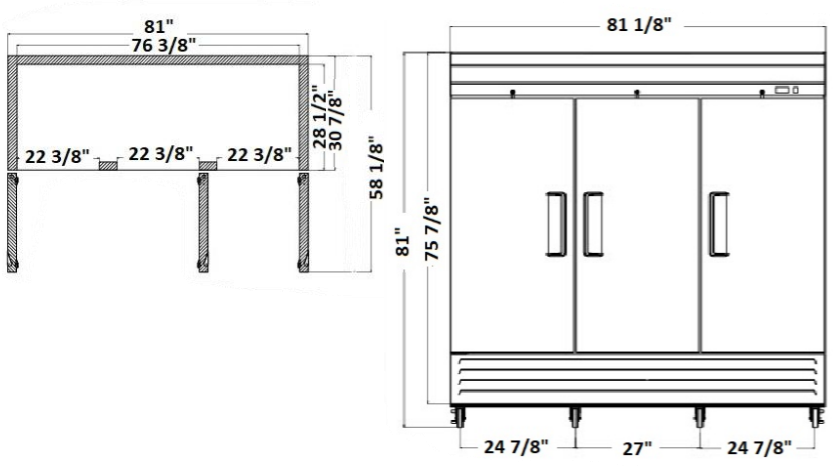

NOTE: Dimensions are in inches.
NOTE: Dimensions are all nominal lengths, use final spec sheet for exact data and model availability.
NOTE: Shipping weight does not include weight of pallets when needed.
NOTE: These storage units are designed for use in stores where temperature and humidity do not exceed listed operating conditions.
NOTE: We reserve the right to change specifications and product design without notice

©November 18, 2026 Excellence Industries

Excellence Industries

Profit from the Power of Partnership.



DSS-F

STAINLESS STEEL FREEZER

KEY FEATURES

- Stainless steel exterior
- Precoated aluminum interior
- Automatic defrost
- Lock and key fitted as standard
- Self-closing solid doors, open to 180°
- 8.5-foot cord
- Environmentally friendly R-290 refrigerant
- Temperature range of -10°F to +10°F

ADVANTAGES

- Plastic recessed door handles make them easy to grip
- Adjustable coated wire shelves are heavy duty and corrosion-resistant
- Evaporators with anti-corrosion treatment allows for longevity



DSS-42F

DOE LISTED

Complies with 2017 DOE standards for commercial freezers with doors

1950 Joe McIntosh Rd
Plant City, FL 33565
800.441.4014 | 813.870.0340
www.excellenceindustries.com

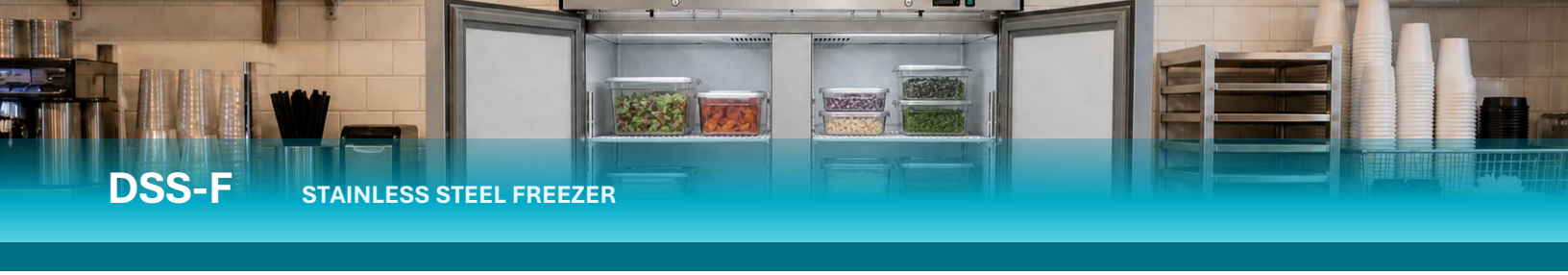

DSS-F STAINLESS STEEL FREEZER

SPECIFICATIONS

Model	DSS-19F	DSS-42F	DSS-66F
Cubic Feet	19.3	42.4	65.5
Approx. Weight (Net)	196 lb (89 kg)	333 lb (151 kg)	472 lb (214 kg)
Approx. Weight (Shipping)	231 lb (104.8 kg)	399 lb (181 kg)	551 lb (250 kg)
Running Amps	3.1	7.2	7.9
Compressor HP	1/3	1/2	1
Shelves	3	6	9
Container Quantity	42	21	13

NEMA 5-15P



115 / 60 / 1

AVAILABLE OPTIONS

- N/A

PRODUCT INFORMATION

Click or scan QR to access spec sheets and technical information

DSS-19F

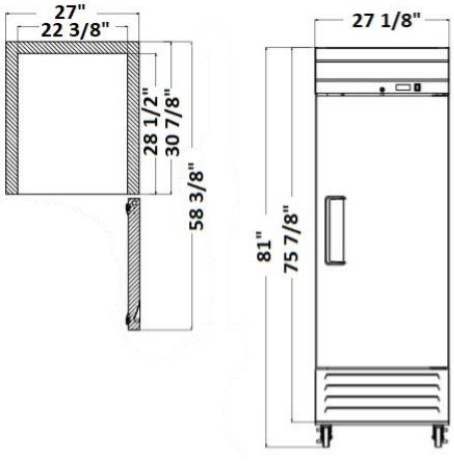

DSS-F (SIDE)

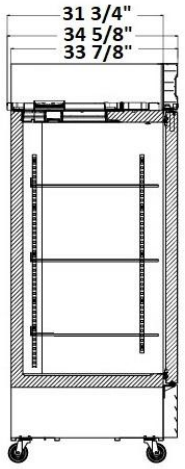

DSS-42F

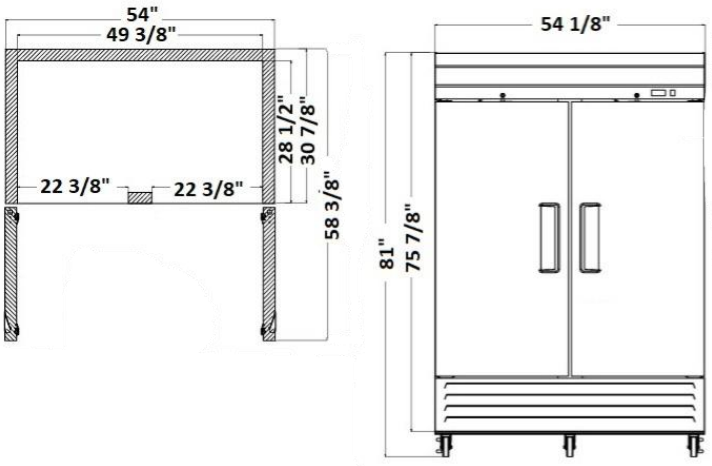

DSS-66F

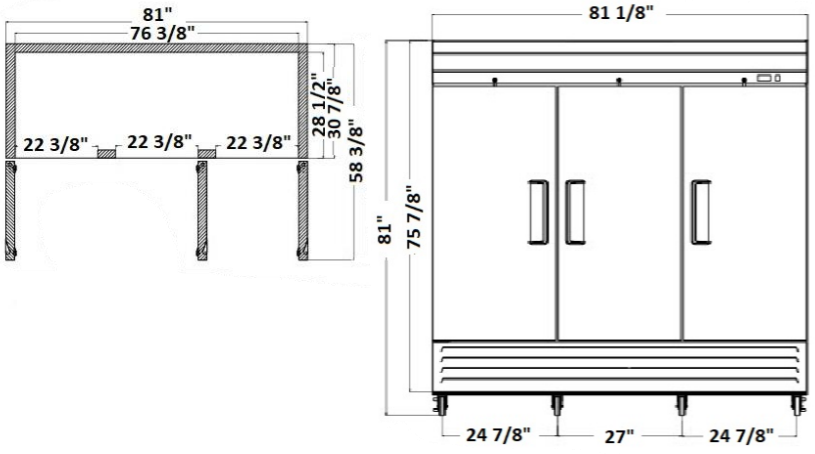

NOTE: Dimensions are in inches.
NOTE: Dimensions are all nominal lengths, use final spec sheet for exact data and model availability.
NOTE: Shipping weight does not include weight of pallets when needed.
NOTE: These storage units are designed for use in stores where temperature and humidity do not exceed listed operating conditions.
NOTE: We reserve the right to change specifications and product design without notice

©November 18, 2026 Excellence Industries

Excellence Industries

Profit from the Power of Partnership.



FT

STORAGE FREEZER

KEY FEATURES

- Integrated lid stop protectors
- Recessed door handles
- Holds 4 3-gallon tubs
- Stainless steel interior/exterior
- Casters standard with 2 locking
- 9.75-foot cord / 8.75-foot accessible cord
- Temperature range of -15°F to +5°F

ADVANTAGES

- Small footprint allows for easy storage
- Compact size features 2 top tubs and 2 bottom tubs
- Easily moved for relocation or cleaning



FT-4

DOE LISTED

Complies with 2017 DOE standards for commercial freezer

1950 Joe McIntosh Rd
Plant City, FL 33565
800.441.4014 | 813.870.0340
www.excellenceindustries.com



FT

STORAGE FREEZER

SPECIFICATIONS

Model	FT-4
Cubic Feet	2.8
Approx. Weight (Net)	90 lb (41 kg)
Approx. Weight (Shipping)	103 lb (47 kg)
Running Amps	1.4
Compressor HP	1/8
3 Gal. Can Capacity / Facing	4/2
Container Quantity	170

NEMA 5-15P



115 / 60 / 1

AVAILABLE OPTIONS

- Graphics

PRODUCT INFORMATION

Click or scan QR to access spec sheets and technical information

FT-4

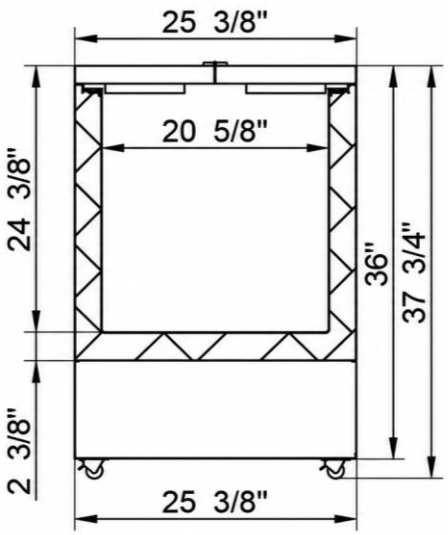

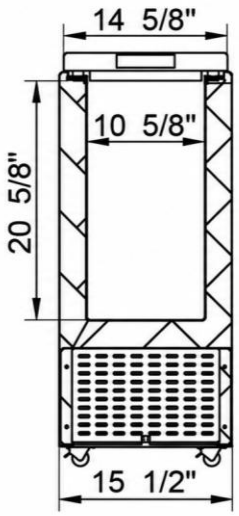

NOTE: Dimensions are in inches.
NOTE: Dimensions are all nominal lengths, use final spec sheet for exact data and model availability.
NOTE: Shipping weight does not include weight of pallets when needed.
NOTE: These storage units are designed for use in stores where temperature and humidity do not exceed listed operating conditions.
NOTE: We reserve the right to change specifications and product design without notice

©November 18, 2026 Excellence Industries

Excellence Industries

Excellence Industries

Profit from the Power of Partnership.



HFF

HEAVY DUTY STORAGE ICE CREAM FREEZER

KEY FEATURES

- Heavy gauge high grade steel interior/exterior
- Cold wall refrigeration
- Bottom drain for easy defrost
- Heavy-duty stainless-steel top and lids
- 6-foot cord
- Environmentally friendly R-290 refrigerant
- Temperature range of -14°F to +6°F

ADVANTAGES

- High-capacity storge
- Low maintenance condenser and cold wall refrigeration system provides low maintenance and operating costs



HFF-8HC

DOE LISTED

Complies with 2017 DOE standards
for commercial ice cream freezer with solid doors

1950 Joe McIntosh Rd
Plant City, FL 33565
800.441.4014 | 813.870.0340
www.excellenceindustries.com



HFF

HEAVY DUTY STORAGE ICE CREAM FREEZER

SPECIFICATIONS

Model	HFF-2HC	HFF-4HC	HFF-8HC	HFF-12HC
Cubic Feet	5	6.6	14.3	23
Approx. Weight (Net)	116 lb (53 kg)	168 lb (76 kg)	248 lb (113 kg)	350 lb (159 kg)
Approx. Weight (Shipping)	149 lb (68 kg)	179 lb (81 kg)	268 lb (122 kg)	353 lb (160 kg)
Running Amps	2.5	3.3	6.7	6.8
Compressor HP	1/5	1/5	1/3	1/3
3 Gal. Can Capacity / Facing	4/3	7/5	19/11	33/18
Container Quantity	110	56	44	28

NEMA 5-15P



115 / 60 / 1

AVAILABLE OPTIONS

- Graphics
- Locking bar
- Casters
- Dipper well

PRODUCT INFORMATION

Click or scan QR to access spec sheets and technical information

HFF-2HC TOP

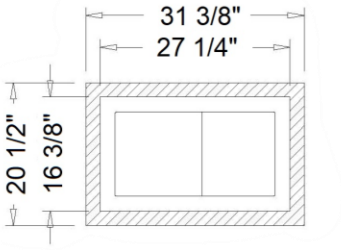

HFF-4HC / HFF-8HC / HFF-12HC TOP

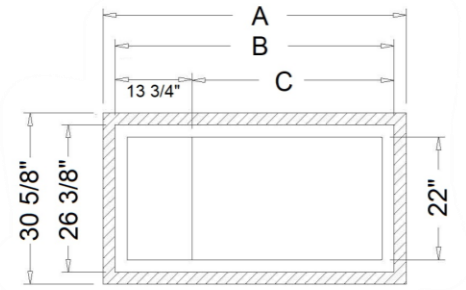

HFF-2HC FRONT

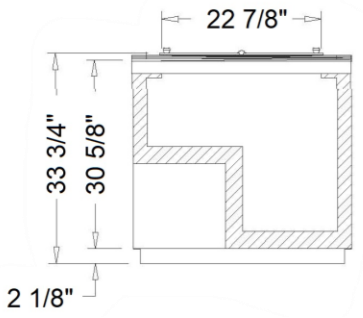

HFF-4HC / HFF-8HC / HFF-12HC FRONT

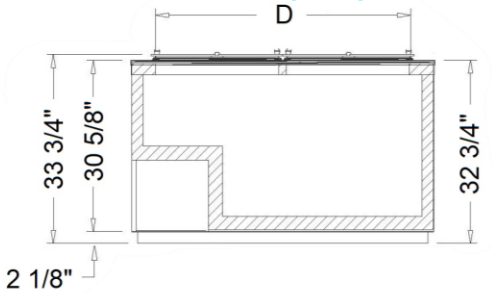

Model	A	B	C	D
HFF-4HC	30 3/4”	26 3/8”	12 5/8”	22”
HFF-8HC	54 1/4”	49 7/8”	36 1/8”	45 1/2”
HFF-12HC	80 3/4”	76 3/8”	62 5/8”	72”

NOTE: Dimensions are in inches.
NOTE: Dimensions are all nominal lengths, use final spec sheet for exact data and model availability.
NOTE: Shipping weight does not include weight of pallets when needed.
NOTE: These storage units are designed for use in stores where temperature and humidity do not exceed listed operating conditions.
NOTE: We reserve the right to change specifications and product design without notice

©November 18, 2026 Excellence Industries

Excellence Industries

Profit from the Power of Partnership.



ISL

SOLID LID ICE CREAM FREEZER

KEY FEATURES

- Holds 6 3-gallon tubs
- Standard lid lock
- Casters with 2 locking
- 6-foot cord
- Environmentally friendly R-290 refrigerant
- Temperature range of -13°F to 0°F

ADVANTAGES

- Perfect sized unit for back-room storage
- Ideal for four 3-gallon tub facings with 2 in storage
- Easily moved



ISL-5

DOE LISTED

Complies with 2017 DOE standards
For commercial ice cream freezer

1950 Joe McIntosh Rd
Plant City, FL 33565
800.441.4014 | 813.870.0340
www.excellenceindustries.com



ISL

SOLID LID ICE CREAM FREEZER

SPECIFICATIONS

Model	ISL-5
Cubic Feet	5
Approx. Weight (Net)	86 lb (39 kg)
Approx. Weight (Shipping)	104 lb (47 kg)
Running Amps	1.3
Compressor HP	1/5
3 Gal. Can Capacity	6
Optional Baskets	2
Container Quantity	138

NEMA 5-15P



115 / 60 / 1

AVAILABLE OPTIONS

- Graphics
- 3 section hanging baskets
- Can holder kit
- Dipper well
- Tub holder

PRODUCT INFORMATION

Click or scan QR to access spec sheets and technical information

ISL-5

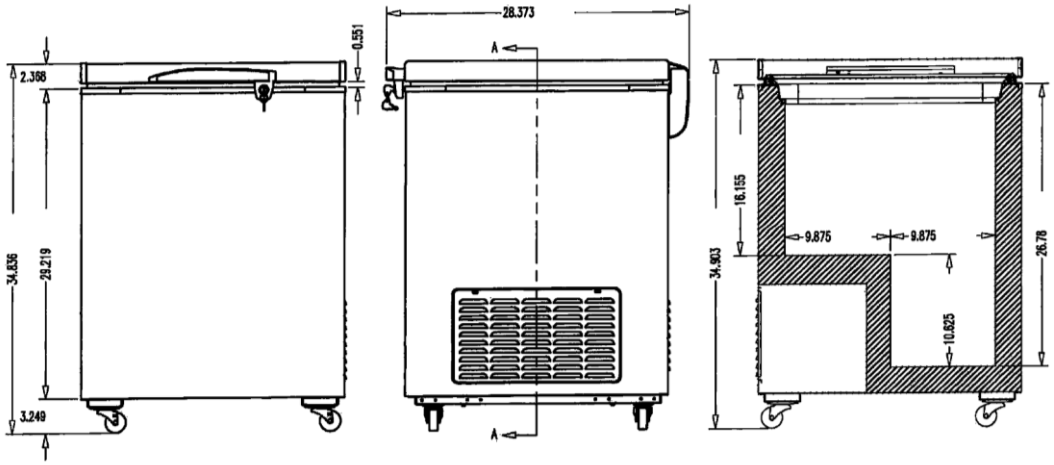

NOTE: Dimensions are in inches.
NOTE: Dimensions are all nominal lengths, use final spec sheet for exact data and model availability.
NOTE: Shipping weight does not include weight of pallets when needed.
NOTE: These storage units are designed for use in stores where temperature and humidity do not exceed listed operating conditions.
NOTE: We reserve the right to change specifications and product design without notice

©November 18, 2026 Excellence Industries

Excellence Industries

Profit from the Power of Partnership.



MCSC

MILK COOLER

KEY FEATURES

- Reinforced interior base
- Lock and key standard
- Floor racks
- Heavy duty fan motor
- Cold wall evaporator
- Temperature range of +32°F to +38°F

ADVANTAGES

- A one screw maintenance cover allows for quick access
- Heavy duty bumpers protect the lids
- Casters for easy cleaning



MCSC-16

DOE LISTED

Complies with 2017 DOE standards
for commercial cooler with solid doors

1950 Joe McIntosh Rd
Plant City, FL 33565
800.441.4014 | 813.870.0340
www.excellenceindustries.com



MCSC MILK COOLER

SPECIFICATIONS

Model	MCSC-12	MCSC-16
Cubic Feet	16	22
Approx. Weight (Net)	254 lb (115 kg)	299 lb (136 kg)
Approx. Weight (Shipping)	318 lb (144 kg)	385 lb (175 kg)
Running Amps	6	6
Compressor HP	3/8	3/8
Milk Crates	12	16
Container Quantity	46	42

NEMA 5-15P



115 / 60 / 1

AVAILABLE OPTIONS

- Graphics

PRODUCT INFORMATION

Click or scan QR to access spec sheets and technical information

MCSC-12

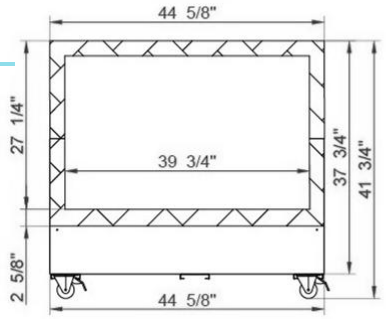

MCSC-16

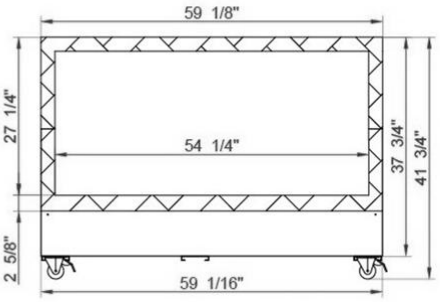

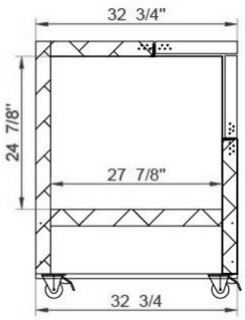

NOTE: Dimensions are in inches.
NOTE: Dimensions are all nominal lengths, use final spec sheet for exact data and model availability.
NOTE: Shipping weight does not include weight of pallets when needed.
NOTE: These storage units are designed for use in stores where temperature and humidity do not exceed listed operating conditions.
NOTE: We reserve the right to change specifications and product design without notice

©November 18, 2026 Excellence Industries

Excellence Industries





Ultra Cold

LAB	126
UCS	128
VAC	130

Excellence Industries

Profit from the Power of Partnership.



LAB

ULTRA COLD STORAGE FREEZER

KEY FEATURES

- Acoustic alarm
- Sturdy insulated lid secured by handle lock
- 4” of insulation
- 10.5-foot cord
- Environmentally friendly R-290 refrigerant
- Temperature range of -122°F to -50°F

ADVANTAGES

- Can be attached to external alarms for enhanced safety
- Inner lids are used to optimize functionality



LAB-51

1950 Joe McIntosh Rd
Plant City, FL 33565
800.441.4014 | 813.870.0340
www.excellenceindustries.com



LAB

ULTRA COLD STORAGE FREEZER

SPECIFICATIONS

Model	LAB-28	LAB-51
Cubic Feet	4.6	10.6
Approx. Weight (Net)	124 lb (56 kg)	139 lb (63 kg)
Approx. Weight (Shipping)	177 lb (80 kg)	194 lb (88 kg)
Running Amps	5.0	5.0
Compressor HP	1/2	3/4
Container Quantity	90	50

NEMA 5-15P



115 / 60 / 1

PRODUCT INFORMATION

Click or scan QR to access spec sheets and technical information

AVAILABLE OPTIONS

- Graphics

LAB SERIES

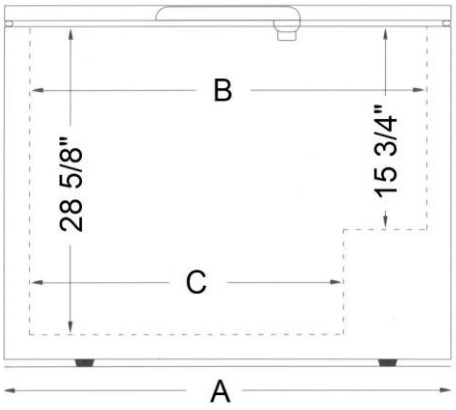

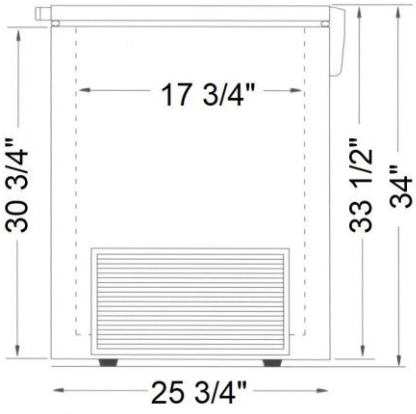

Model	A	B	C
LAB-28	28 1/2”	20 1/2”	12 5/8”
LAB-51	51 1/2”	43 1/2”	35 5/8”

NOTE: Dimensions are in inches.
NOTE: Dimensions are all nominal lengths, use final spec sheet for exact data and model availability.
NOTE: Shipping weight does not include weight of pallets when needed.
NOTE: These storage units are designed for use in stores where temperature and humidity do not exceed listed operating conditions.
NOTE: We reserve the right to change specifications and product design without notice

©November 18, 2026 Excellence Industries

Excellence Industries

Profit from the Power of Partnership.



UCS

ULTRA COLD STORAGE FREEZER

KEY FEATURES

- Acoustic alarm
- Sturdy insulated lid secured by handle lock
- 4” of insulation
- 10.5-foot cord
- Environmentally friendly R-290 refrigerant
- Temperature range of -49°F to +14°F

ADVANTAGES

- Can be attached to external alarms for enhanced safety
- A pull out defrost drain for easy defrosting



UCS-41HC

DOE LISTED

Complies with 2017 DOE standards for commercial ice cream freezer

1950 Joe McIntosh Rd
Plant City, FL 33565
800.441.4014 | 813.870.0340
www.excellenceindustries.com



UCS

ULTRA COLD STORAGE FREEZER

SPECIFICATIONS

Model	UCS-28	UCS-41
Cubic Feet	4.6	8.1
Approx. Weight (Net)	101 lb (46 kg)	130 lb (59 kg)
Approx. Weight (Shipping)	108 lb (49 kg)	137 lb (62 kg)
Running Amps	3.0	3.0
Compressor HP	1/3	3/8
Container Quantity	90	64

NEMA 5-15P



115 / 60 / 1

PRODUCT INFORMATION

Click or scan QR to access spec sheets and technical information

AVAILABLE OPTIONS

- Graphics

UCS SERIES

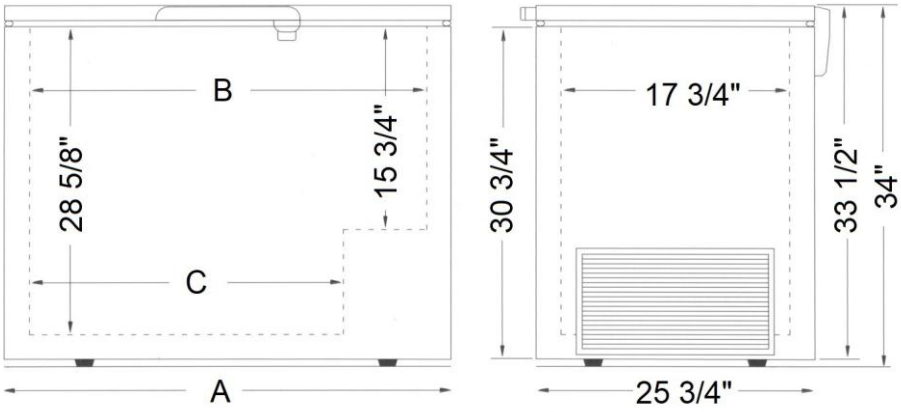

Model	A	B	C
UCS-28	28 1/2”	20 1/2”	12 5/8”
UCS-41	41 1/2”	33 1/2”	25 5/8”

NOTE: Dimensions are in inches.
NOTE: Dimensions are all nominal lengths, use final spec sheet for exact data and model availability.
NOTE: Shipping weight does not include weight of pallets when needed.
NOTE: These storage units are designed for use in stores where temperature and humidity do not exceed listed operating conditions.
NOTE: We reserve the right to change specifications and product design without notice

©November 18, 2026 Excellence Industries

Excellence Industries

Profit from the Power of Partnership.



VAC

ULTRA COLD STORAGE FREEZER

KEY FEATURES

- Acoustic alarm
- External alarm attachment available
- Sturdy insulated lid secured by handle lock
- 4” of insulation
- 10.5-foot cord
- Environmentally friendly R-290 refrigerant
- Temperature range of -102°F to -4°F

ADVANTAGES

- Most flexible sub-zero storage freezer due to wide temperature range and coverage of storage temperature for Moderna and Pfizer vaccines



UCS-41HC

1950 Joe McIntosh Rd
Plant City, FL 33565
800.441.4014 | 813.870.0340
www.excellenceindustries.com



VAC

ULTRA COLD STORAGE FREEZER

SPECIFICATIONS

Model	VAC-11	VAC-31
Cubic Feet	4.6	10.6
Approx. Weight (Net)	124 lb (56 kg)	176 lb (80 kg)
Approx. Weight (Shipping)	139 lb (63 kg)	194 lb (88 kg)
Running Amps	4.4	4.9
Compressor HP	3/4	3/4
Container Quantity (20')	42	24
Container Quantity (40')	90	50

NEMA 5-15P



115 / 60 / 1

AVAILABLE OPTIONS

- Graphics

PRODUCT INFORMATION

Click or scan QR to access spec sheets and technical information

VAC SERIES

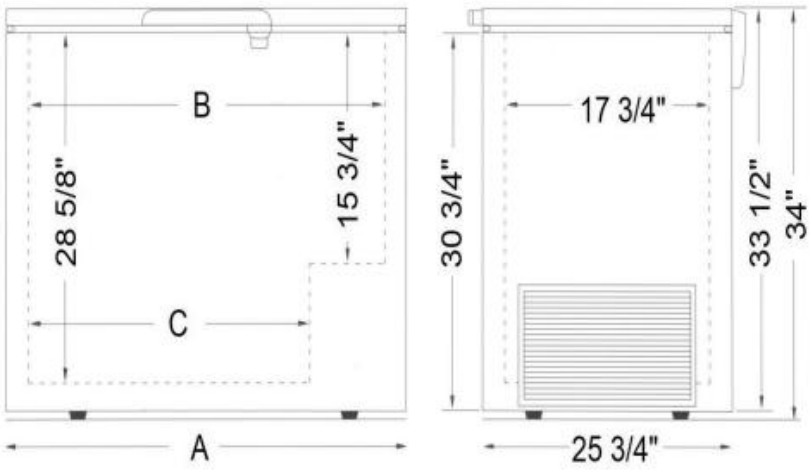

Model	A	B	C
VAC-11	28 1/2"	20 1/2"	12 5/8"
VAC-31	51 1/2"	43 1/4"	35 3/8"

NOTE: Dimensions are in inches.
NOTE: Dimensions are all nominal lengths, use final spec sheet for exact data and model availability.
NOTE: Shipping weight does not include weight of pallets when needed.
NOTE: These storage units are designed for use in stores where temperature and humidity do not exceed listed operating conditions.
NOTE: We reserve the right to change specifications and product design without notice

©November 18, 2026 Excellence Industries

Excellence Commercial Products

STANDARD WARRANTY – Within the Continental United States

Excellence Industries warrants to the user:

ONE YEAR CABINET WARRANTY

The cabinet and all its parts shall be free of defects in the material and workmanship under normal use and service for a period of one year from the date of purchase. Excellence Industries sole obligation under this warranty shall be limited, at its option, to either repairing or replacing any part of the cabinet determined by Excellence Industries to be defective. Excellence will pay standard labor rates when service is dispatched through Excellence Industries national service desk at 1-877-872-3797. Labor for outside service companies is only reimbursable with prior arrangements and written approval from Excellence Industries.

ADDITIONAL FOUR-YEAR COMPRESSOR WARRANTY

In addition to the Standard Warranty, Excellence Industries offers an additional FOUR-YEAR COMPRESSOR WARRANTY. Excellence Industries agrees to replace the compressor with a compressor of like or one or similar design a capacity if it is determined by Excellence that the compressor is inoperative due to defects in factory workmanship or material under normal use and service. The warranty is for the part only and does not include any labor charges.

Excellence's obligation under the Four-Year Compressor Warranty Contract shall be limited to a period not to exceed five years from the date of installation. The Four-Year Compressor Warranty does not apply to any part of the cabinet or its finish, nor does it apply to the control, relay, fan of any electrical component.

Further terms of the contract cannot be considered valid if the compressor has been subjected to an accident, alteration, abuse, misuse, or damaged by shipping, delivery, flood, fire, or acts of God. The Four-Year Compressor Warranty Contract shall place no liability on Excellence for any labor or labor costs in replacing the compressor, heat exchanger, drier, fan or replaceable parts of the cabinet. Excellence Industries shall only be obligated to furnish the replacement compressor.

LIMITED FIVE-YEAR LEAK WARRANTY

The cabinet shall be free of insulation failures and refrigerant leaks within the insulated area of the cabinet for a period of five years from the date of installation or six years from the date of manufacture, whichever occurs first. Excellence sole obligation under this warranty shall be limited to the following:

- Year one after purchase - Full replacement including freight.
- Year two after purchase - A new cabinet can be purchased by customer at 20% of the original purchase price. Customer to bear cost of freight from Excellence warehouse.
- Year three after purchase - A new cabinet can be purchased by customer at 40% of the original purchase price. Customer to bear cost of freight from Excellence warehouse.
- Year four after purchase -A new cabinet can be purchased by customer at 60% of the original purchase price. Customer to bear cost of freight from Excellence warehouse.
- Year five after purchase - A new cabinet can be purchased by customer at 80% of the original purchase price. Customer to bear cost of freight from Excellence warehouse.

At Excellence Industries discretion, the company can demand return of the cabinet in question. Excellence will pay any associated cost of freight to perform internal leak tests. If the unit is deemed to not have an internal leak, the customer must bear all the cost of freight both to and from Excellence's facilities and service.

Do not Drill Holes in Cabinet

Refrigeration tubing and wiring is routed through the cabinet walls. Leaks, wet insulation, or electrical problems caused by drilled holes are not covered by warranty. Any tampering with, drilling holes in or unauthorized modification to the cabinet will void all warranties.

General:

ABUSE, MISUSE, ACCIDENTS - Excellence Industries shall not be responsible for parts or assemblies, which upon inspection are determined by Excellence Industries to have been subjected to misuse, neglect, lack of maintenance, alteration, accident, abuse, damage during transit or delivery or by fire or flood.

CONSEQUENTIAL DAMAGES - IN NO EVENT SHALL EXCELLENCE INDUSTRIES BE LIABLE FOR SPECIAL, INDIRECT OR CONSEQUENTIAL DAMAGES, INCLUDING WITHOUT LIMITATION, FOOD SPOILAGE OR PRODUCT SPOILAGE CLAIMS, NOR FOR ANY DELAY IN THE PERFORMANCE OF THIS WARRANTY DUE TO CAUSES BEYOND ITS CONTROL.

The standard warranty and any service contract related to the STANDARD WARRANTY shall apply only to the products sold and used within the boundaries of the Continental United States.

Users may file warranty claims either directly with Stajac or with immediate seller from whom the cabinet was purchased. All claims must be supported by information concerning the alleged defect and specifically identified by the Serial Number of the cabinet.

THERE ARE NO OTHER, WARRANTIES EXPRESS, IMPLIED OR STATUTORY, EXCEPT THIS WARRANTY, WHICH IS IN LIEU OF ALL OTHER WARRANTIES INCLUDING TO THE EXTENT PERMITTED BY LAW, ANY IMPLIED WARRANTY OF MERCHANTABILITY OR FITNESS FOR A PARTICULAR PURPOSE.

Excellence Industries

1950 Joe McIntosh Rd
Plant City, FL 33565
800.441.4014 | 813.870.0340
www.excellenceindustries.com

©November 18, 2026 Excellence Industries

Notes

Exceptional Global Experience

Extra-Mile Customer Service

Extraordinary Refrigeration Solutions

Excellence Industries

Profit from the Power of Partnership.

1950 Joe McIntosh Rd
Plant City, FL 33565
800.441.4014 | 813.870.0340
www.excellenceindustries.com
November 18, 2026